BARRETT

Operating and Installation Manual

Barrett PRC-4090 Tactical HF SDR Transceiver

4090-00-02/01

s/w v1.8

Compliance

Barrett 4000 series transceivers have been designed to comply to the following communications standards:

- Australian / New Zealand Standard
- MF and HF Radio Communications.

Equipment in the land mobile service utilising single sideband suppressed carrier emission:

- AS/NZS 4770:2000
- FCC Part 90.
- FCC Part 87
- Industry Canada (IC) RSS-125 Issue 2

Barrett 4000 series transceivers comply to the following EMC standard:

- EN301 489-1 V 1.4.1 (2002-08).

Barrett 4000 series transceivers comply to the following electrical safety standard:

- EN60950-1:2002.

FCC RF Exposure Compliance Statement

The Barrett 4000 Series transceivers have been evaluated and comply with the Federal Communications Commission (FCC) RF exposure limits for the General Population/Uncontrolled exposure environment.

In addition, the transceivers have been designed to comply with the following standards and guidelines:

- FCC 96-326, Guidelines for Evaluating the Environmental Effects of Radio-Frequency Radiation
- FCC OET Bulletin 65 Edition 01-01 (2001) Supplement C, Evaluating Compliance with FCC
- Guidelines for Human Exposure to Radio Frequency Electromagnetic Fields
- ANSI/IEEE C95.1-1992, IEEE Standard for Safety Levels with Respect to Human Exposure to Radio Frequency Electromagnetic Fields, 3 kHz to 300 GHz
- ANSI/IEEE C95.3-1992, IEEE Recommended Practice for the Measurement of Potentially Hazardous Electromagnetic Fields - RF and Microwave.

RF Exposure Warning

To ensure optimal transceiver performance and to avoid exposure to excessive electromagnetic fields, the antenna system must be installed according to the instructions provided.

High voltages exist on the antenna during transmission and tuning. Do not touch the antenna during these activities. RF burns may result.

Install the grounding system or counterpoise as directed to prevent RF burns from any metal part of the transceiver.

Safe working distance is based on continuous exposure to CW type transmissions, as set out in the ICNIRP Exposure Guidelines (1998) for occupational exposure. Safe working distance can be reduced with normal voice communication.

For IC and FCC compliance, when the PRC-4090 transceiver is used at a power level of 150 watts PEP and a 13 dBi gain antenna, the antenna(s) used with this Transceiver should be located at least 6 metres from the operator and should not be co-located or operating in conjunction with any other antenna or transmitter.

For IC and FCC compliance, when the PRC-4090 transceiver is used in a vehicular environment at a power level of 150 watts PEP with 1.5 dBi gain antenna, the antenna(s) used with this transceiver should be located at least 1.6 metres from the operator and should not be co-located or operating in conjunction with any other antenna or transmitter.

Typical antenna types and minimum separation distance:

Antenna type	Gain (dBi)	PEP (W)	Minimum safe separation distance (m)	Typical Environment
Automatic tuned and whip	0	150	1.3	Vehicle
Magnetic Loop	1.5	150	1.6	Vehicle
Multi-wire Broadband	5	150	2.4	Fixed
Log-Periodic	13	150	5.9	Fixed
Automatic tuned and Whip	0	100	1.0	Vehicle
Magnetic Loop	1.5	100	1.2	Vehicle
Multi-wire Broadband	5	100	1.8	Fixed
Log-periodic	13	100	4.4	Fixed
Automatic tuned and Whip	0	30	0.5	Vehicle

Antenna type	Gain (dBi)	PEP (W)	Minimum safe separation distance (m)	Typical Environment
Magnetic Loop	1.5	30	0.7	Vehicle
Multi-Wire Broadband	5	30	1.1	Fixed
Log-Period	13	30	2.7	Fixed

The above antennas are identified for reference only. It is important that the installer and operator maintain a minimum safe separation distance with the actual antenna used in the installation and to insure, in a vehicular environment, that the transmitter is only used when persons outside the vehicle are at least the recommended lateral distance away.

The image below shows an example of minimum recommended separation distance from antenna in a vehicular environment.

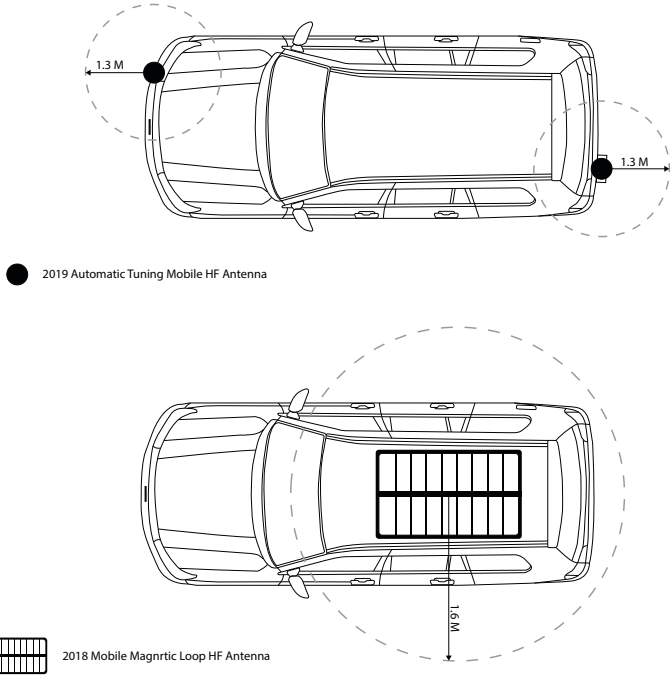

Note: References to Vehicular environments and minimum safe operating distances relate to persons outside the vehicle only and not to persons within the vehicle.

Contents

INTRODUCTION 1

This chapter contains the following sections:

- Introduction
- Terms and Abbreviations
- The Barrett PRC-4090 HF Transceiver Overview

Introduction

The Barrett PRC-4090 Tactical Transceiver is an SDR based HF SSB transceiver with a frequency range of 1.5 to 30 MHz in transmit and 250kHz -30MHz. The Barrett PRC-4090 is designed using the latest technology enabling a physically small package with a full feature complement.

Designed to operate as in the most arduous environments, as encountered in portable, off-road vehicles, vessels and aircraft environs, the Barrett PRC-4090 will provide many years of efficient and trouble free service.

The Barrett PRC-4090 supports features such as digital voice, data transmission and remote diagnostics as well as established features such as Selective Call (Selcall), direct dial telephone connection to base stations fitted with telephone interconnect systems (Telcall), GPS location, 2G and 3G ALE (Automatic Link Establishment) and frequency hopping. These features make the Barrett PRC-4090 HF Transceiver one of the most economical and versatile HF transceivers available today.

Up to 1000 channels are available to be field or workshop programmable. Auxiliary features such as Selcall, Telcall, scanning, mute status, alarm system etc. can be individually enabled or disabled for every channel as required to suit your operation.

The Barrett PRC-4090 Transceiver caters for increased use of HF data transmission for Internet email access and point-to-point data applications, by providing a comprehensive data modem interface port, high speed transmit-to-receive switching, a high stability frequency standard and an efficient cooling system option.

The Barrett PRC-4090 is operated by a smartphone-style touchscreen, full colour Control Handset. The handset integrates seamlessly into manpack, vehicle and base station installations when used with the cradle and cradle docking station. The streamlined design and unobtrusive size easily mounts to a vehicle dashboard or vessel helm.

The Barrett PRC-4090 Transceiver can be controlled from all major mobile and desktop platforms. Full remote control is available via the Barrett PRC-4090 Remote Control app, providing unprecedented access to all transceiver functionality across all major platforms.

Teamed with other matching Barrett products which include antennas, power supplies, vehicle tracking packages and HF modems, the Barrett PRC-4090 HF Transceiver becomes a powerful tool, providing solutions to many long distance communication requirements.

Important Disclosure

Please note that this manual describes all the features of the PRC-4090 HF SDR Transceiver and that some variants of the PRC-4090 may not have all the features installed.

Illustrations may show accessories, optional equipment or other features which are not part of the standard specification and are not available in individual countries.

Terms & Abbreviations

Term / Abbreviation	Definition
ALE	Automatic Link Establishment
AM	Amplitude Modulation
ARINC	A set of standards as established by Aeronautical Radio, Incorporated (ARINC).
Call History	A list containing details of the last thirty calls received.
CCIR	One of many possible Selcall formats as defined by the Consultative Committee on International Radio (CCIR).
CF	Custom Filter selection
CW	Continuous Wave (used for Morse code)
dB	Decibels
dBm	Power ratio in decibels (dB) of the measured power referenced to one milliwatt (mW).
DSP	Digital Signal Processing
ESU	Encryption Synchronisation Unit
FHSS	Frequency Hopping Spread Spectrum
GPS	Global Positioning System
HF	High Frequency
INT	International Selcall format
LCD	Liquid Crystal Display
LSB	Lower Sideband
LUF	Lowest Usable Frequency
MUF	Maximum Usable Frequency
OEM	Original Equipment Manufacturer, OEM Selcall Format
OTG	On-The-Go (USB)
PCB	Printed Circuit Board
PEP	Peak Envelope Power
PIN	Personal Identification Number
PRC	Portable Radio Communications
PSTN	Public Switched Telephone Network

Term / Abbreviation	Definition
PTT	Push to talk
Receive Only Channel	A channel that receives calls but does not transmit calls.
Revertive Tone / Signal	An acknowledgment signal automatically transmitted from a station receiving a Selcall.
RF	Radio Frequency
RFDS	Royal Flying Doctor Service
Scan Table	A list of channels used when scanning for incoming calls.
Selcall	Selective Calls
SCF	Suppressed Carrier Frequency
SDR	Software Defined Radio
SDS	System Docking Station
SSL	Signal Strength Level
Station ID	The ID of the station being called (the receiving station's Self ID).
Self ID	The programmed address identification number of a local station. (Used by other stations to call you.)
SMS	Short Message Service
SSB	Single Sideband (a transmission format)
Telcall	Telephone call using the Selective Call protocol.
USB	Upper Sideband
VSWR	Voltage Standing Wave Ratio

The Barrett PRC-4090 HF Transceiver Overview

Manpack Configuration

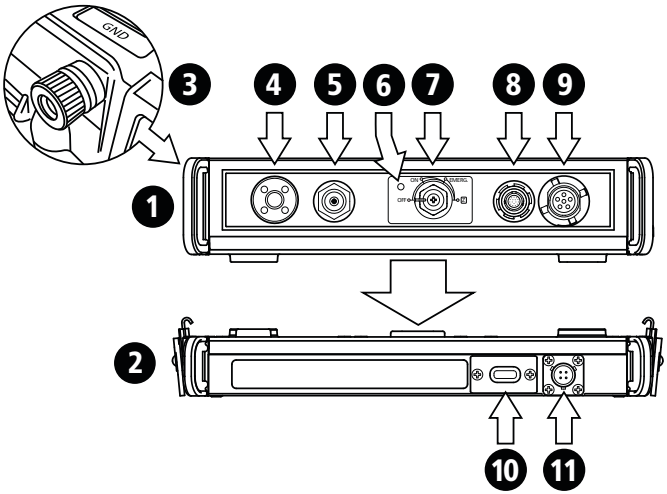

1	PRC-4090 HF SDR Transceiver (P/N 4090-00-01)
2	PRC-4090 16Ah battery pack (P/N 4090-03-05)
3	Earth stud
4	Whip antenna connection
5	50 Ohm antenna connection
6	LED status indicator
7	On/Off, Emergency and Zeroise switch
8	PRC-4090 Control Handset connector
9	H250 Handset connector
10	Battery indicator
11	Battery charger connector

Mobile Configuration (front)

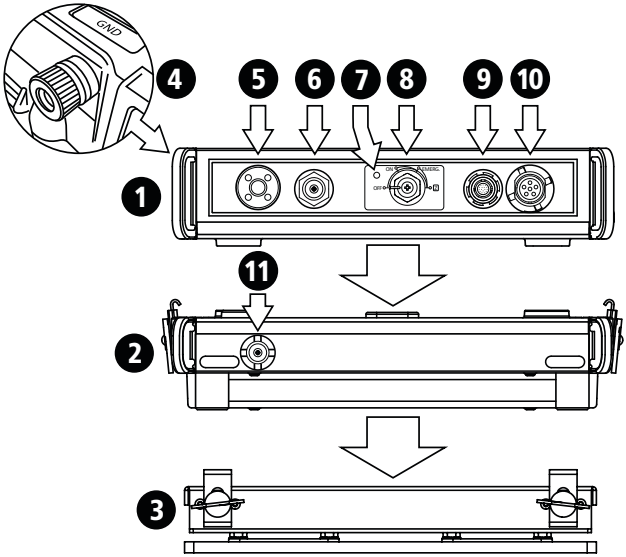

1	PRC-4090 HF SDR Transceiver (P/N 4090-00-01)
2	PRC-4090 System Docking Station (P/N 4090-05-00)
3	PRC-4090 Anti-vibration plate (P/N4090-05-07)
4	Earth stud
5	Whip antenna connection
6	50 Ohm antenna connection
7	LED status indicator
8	On/Off, Emergency and Zeroise switch
9	PRC-4090 Control Handset connector
10	H250 Handset connector
11	RF Connector (from 50 Ohm output)

Mobile Configuration (rear)

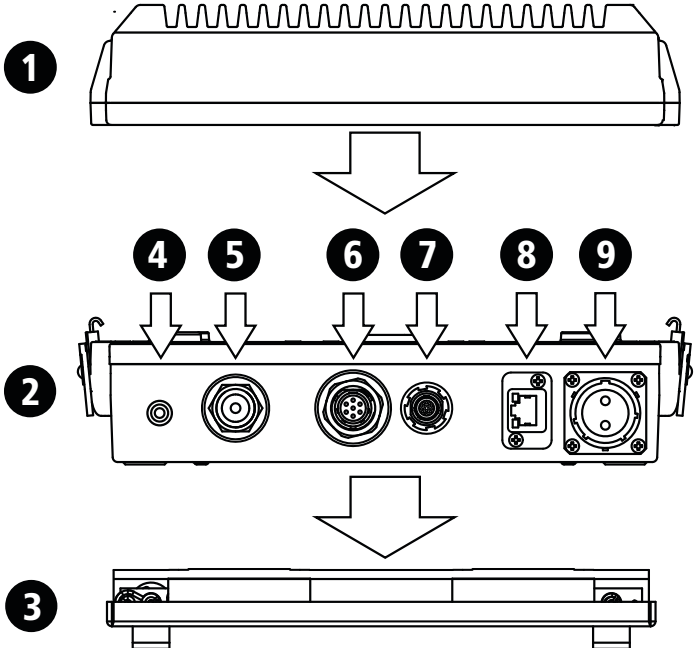

1	PRC-4090 Transceiver (P/N 4090-00-01)
2	PRC-4090 System Docking Station (P/N 4090-05-00)
3	PRC-4090 Anti-vibration plate (P/N 4090-05-07)
4	Ground
5	Coaxial connection (RF out)
6	ATU Connector
7	Aux. PRC-4090 Control Handset connector
8	Ethernet connection (RJ45)
9	DC in (+11 V to +28 V DC)

Base Station Configuration (front)

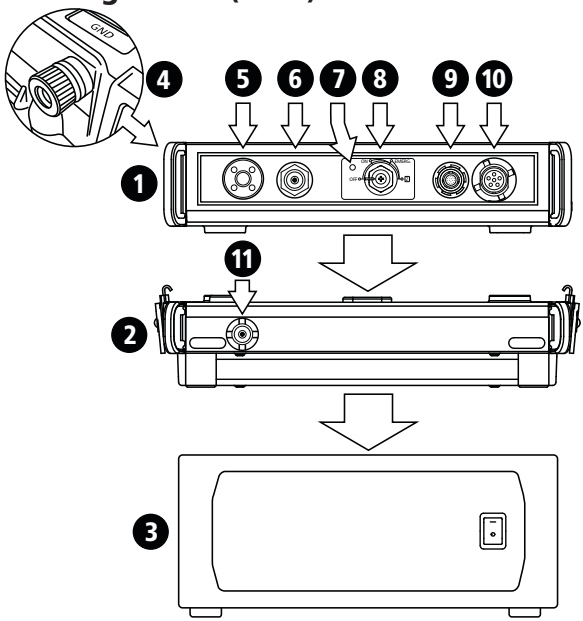

1	PRC-4090 Transceiver (P/N 4090-00-01)
2	PRC-4090 System Docking Station (P/N 4090-05-00)
3	PRC-4022 Power Supply (P/N 4090-06-01)
4	Earth stud
5	Whip antenna connection
6	50 Ohm antenna connection
7	LED status indicator
8	On/Off, Emergency and Zeroise switch
9	PRC-4090 Control Handset connector
10	H250 Handset connector
11	RF Connector (from 50 Ohm output)

Base Station Configuration (rear)

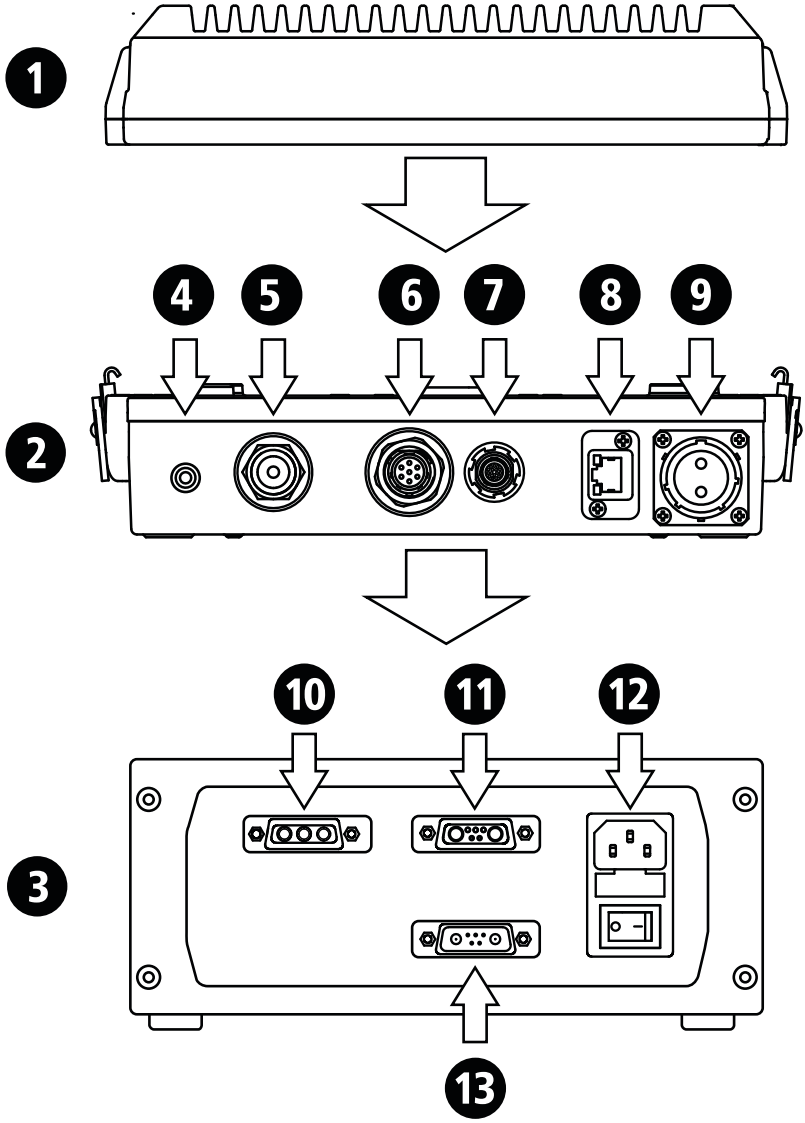

1	PRC-4090 Transceiver (P/N 4090-00-01)
2	PRC-4090 System Docking Station (P/N 4090-05-00)
3	PRC-4022 Power Supply (P/N 4090-06-01)
4	Ground
5	Coaxial connection (RF out)
6	ATU
7	Aux. PRC-4090 Control Handset connector
8	Ethernet connection
9	DC in (+11 V to +28 V DC)
10	DC out (24 V DC)
11	Auxiliary out (13.8 V DC)
12	AC in (100-240 V AC)
13	Battery backup (13.8 V DC)

Control Handset (Front)

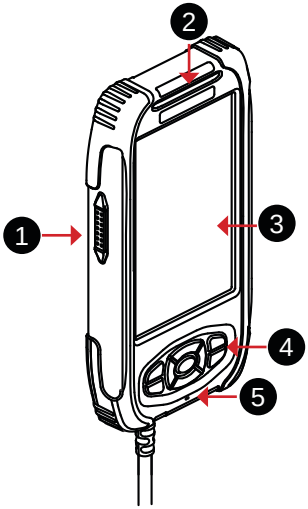

1	PTT button
2	Handset Speaker
3	LCD Display
4	Keypad
5	Microphone

Control Handset (Rear)

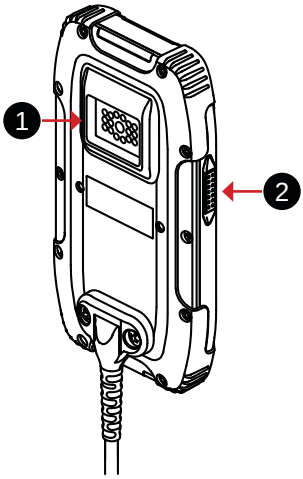

1	Hot-shoe connection to cradle and USB interface unit
2	PTT Button

Cradle and Handset Docking Station (rear)

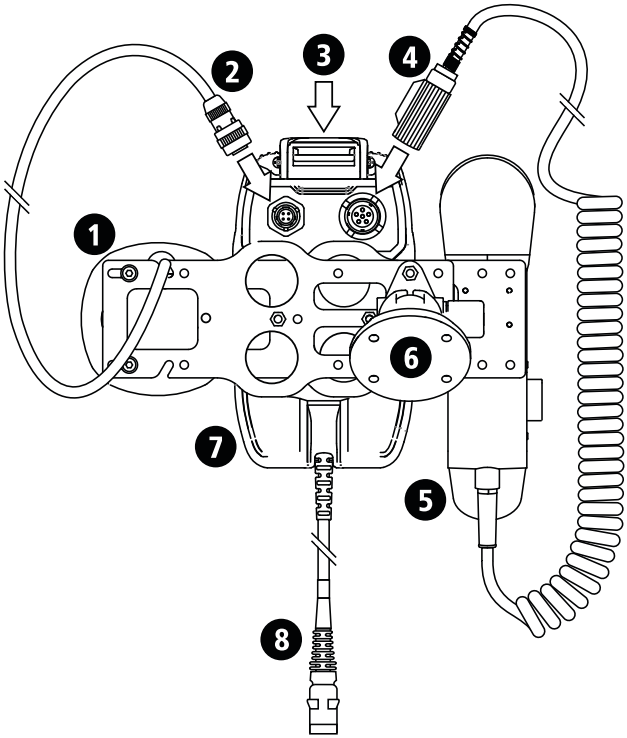

1	External speaker (3W, 8 Ohm)
2	External Speaker connection
3	USB connection for WiFi adaptor or programming
4	H-250 handset connection
5	H-250 Handset
6	Control Handset Docking Station (P/N 4090-05-03)
7	Control Handset (P/N 4090-01-09)
8	Connection to PRC-4090 Transceiver

Auxiliary Cables

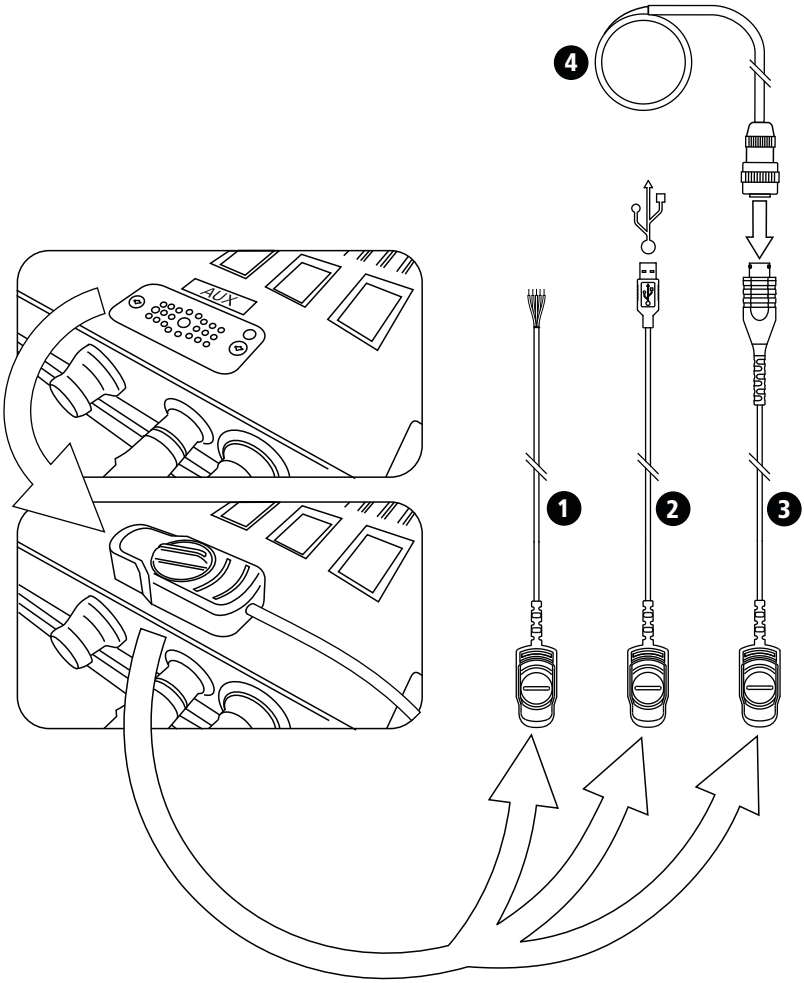

1	Hotshoe cable (unterminated) (P/N 4090-01-34)
2	Hotshoe adapter cable to USB male (P/N 4090-01-32)
3	Hotshoe adapter cable to GPS (P/N 4090-01-31)
4	GPS adaptor (P/N 2090-01-24)

BASIC OPERATION 2

This chapter contains the following sections:

- Starting the Transceiver
- Display
- Antenna Type
- Channel Selection
- Receiving and Transmitting -Voice Call
- Making an Emergency Call

Starting the Transceiver

Ensure the transceiver is attached to a power source appropriate for your situation.

Turn the switch from the off position to the on position.

Reverse the procedure to power off.

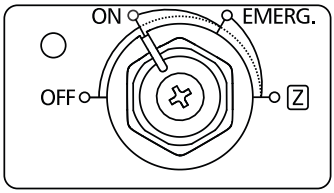

LED status:

Power on: Constant green

Emergency call: Flashing green (rapid flashing green when transmitting)

Zeroise: Flashing red, then solid when complete

Lift and turn the switch to initiate an emergency broadcast (page 27) or to zeroise the transceiver (see page 108).

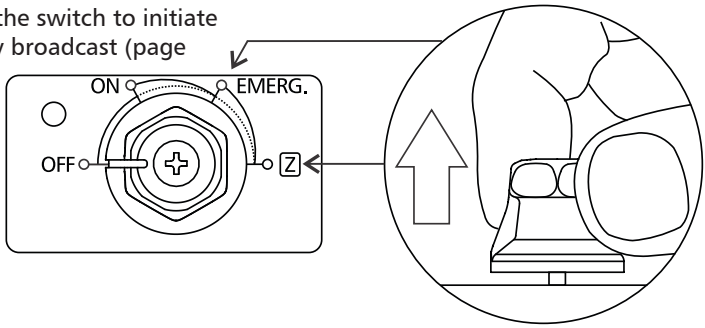

Keypad

There are seven keys on the keypad. Some keys have multiple functions assigned to them depending on when or how long the key is pressed.

Key	Function
▲	Channel Up / Scroll up
▼	Channel Down / Scroll down
◀ ▶	Scroll left and right
ENT	Enter / Set a menu item

Key	Function
CALL	Make a call
BACK	Clear / Back one step
+	Volume Up
−	Volume Down

Display

1	Tune Status	10	Modulation Mode
2	Date and Time	11	Receive/transmit status
3	ALE Status	12	Receive Strength/Transmit Power Indicator
4	Digital Voice/Secure Digital Voice	13	Swipe Menu Access
5	Status Indicators (see page 20)	14	Channel Label
6	Operation icons (see page 20)	15	Channel Frequency
7	ALE (Channel) Status	16	Channel Number
8	Selcall Network	17	ALE 3G Sync status
9	Transmit Power		

Status Indicators


Access Point


GPS


WiFi Client


USB Storage


Low Voltage


Missed Call


Screen Lock


Ethernet


Busy


Networked RS232

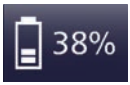

Battery charge

A number on the WiFi Client icon or the Networked RS232 icon indicates the number of connections currently made to that device.

Operation Icons


Toggles Digital Voice or Secure Digital Voice encoding on or off (if fitted).

Opens the channel select menu.


Manually tunes the antenna.


Enables/disables Frequency Hopping (if fitted).


Cycles through low, med, high or no noise reduction.


Toggles mute on/off. See page 88 for further mute details.


Enables/disables scanning.

Swipe Menu

To access this menu, either swipe horizontally across the screen from the left edge to drag open the swipe menu or press and hold the right arrow key. The icons (other than Settings) appear green when enabled and white if disabled.

Accessing the Swipe Menu

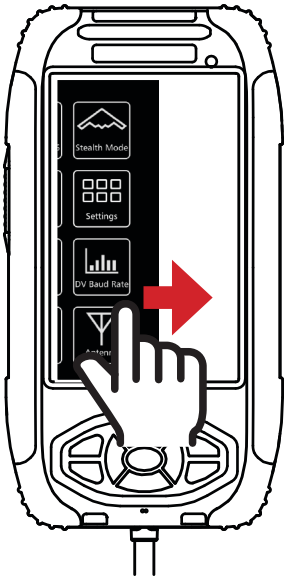

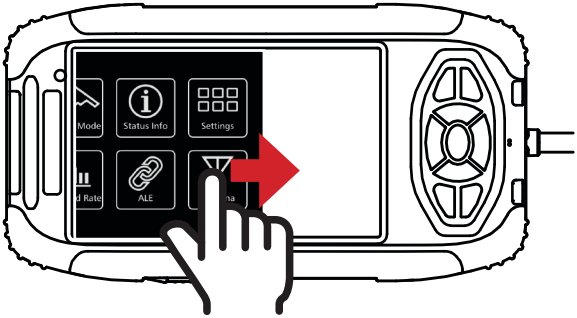

Swipe Menu

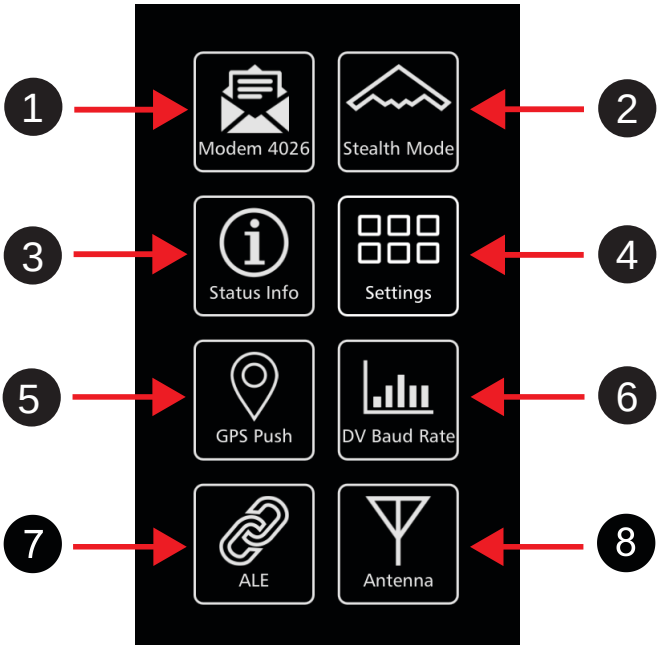

1	Modem Select - Tap to enable internal modem for data use
2	Stealth Mode - When active, all lights and sounds are disabled.
3	Status Information - Displays IDs and mechanical information
4	Settings Menu - Access to Settings menus
5	GPS Push (if fitted) or Display Settings
6	DV Baud Rate - Quick access to Digital Voice Baud Rate settings.
7	ALE Menu - Quick access to ALE menu.
8	Antenna Select - Quick access to antenna select menu.

The items displayed in the Swipe menu are determined by the options installed in the transceiver. Each of the Modem, Stealth Mode and GPS Push icons will turn green when active.

Status Info

The Status Info menu displays important information about the transceiver and the network.

It can be accessed from the Swipe Menu.

It displays the following:

Power: Receive and transmit voltage use, transceiver internal temperature and current draw.

Battery: If in Manpack Configuration, this line will display the time until battery needs to be charged, or if charging, the time until battery is fully charged as well as the current in.

GPS Position: The current GPS position of the transceiver (if acquired).

IP Address: The IP address of the transceiver (if connected to an IP network).

Selcall ID: The primary four and six digit selcall IDs of the transceiver.

ALE 2G Self ID: The Self ID of the transceiver in an ALE 2G network (optional)

ALE 3G Self ID: The Self ID of the transceiver in an ALE 3G network (optional)

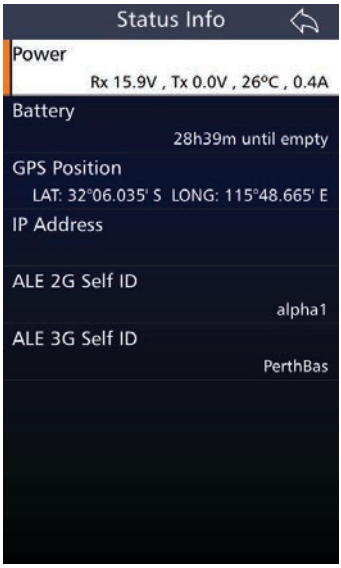

When charging battery:

When not charging battery:

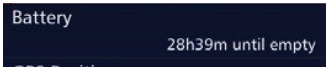

Antenna Type

Before making a call, an antenna type needs to be selected from the Antenna icon in the swipe menu.

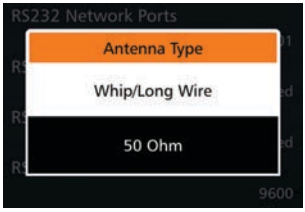

If the transceiver is being used with a PRC-4090 battery pack, the menu will show only 50 Ohm and Whip/ Longwire.

Tap **Antenna 1 Type** from the IO screen to display the Antenna 1 Type screen.

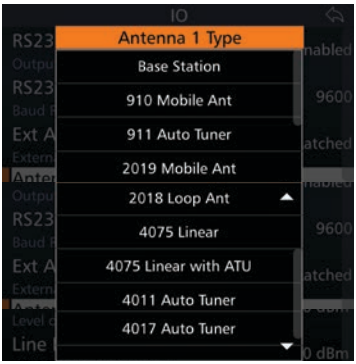

To reveal more items, either swipe down on the touch screen or press  .

Select an antenna type from the following:

Antenna Type	Select when...
Base Station	Base station antennas such as the Barrett 912 series are used. No tuning signals are emitted on channel change.
910 Mobile Ant	Using a Barrett 910 automatic tuning mobile antenna
911 Auto Tuner	Using a Barrett 911 automatic tuner
2019 Mobile Ant	Using a Barrett 2019 automatic tuning mobile HF antenna
2018 Loop Ant	Using the 2018 Mobile magnetic loop HF antenna
4075 Linear	Using the transceiver with a Barrett 4075 series linear amplifier.
4075 Linear with ATU	Using the transceiver with a Barrett 4075 series linear amplifier with ATU.
4011 Auto Tuner	Using a Barrett 4011 automatic tuner
4017 Auto Tuner	Using a Barrett 4017 automatic tuner
OEM Tuner	3040 tuner compatible (non-Barrett product)
OEM 2 Tuner	F2265 tuner compatible (non-Barrett product)
OEM Preselector	Using a non-Barrett Preselector

Selecting a Channel

There are two ways to select a channel on the Barrett PRC-4090 HF SDR Transceiver.

1. From the home screen, press the up (A) or down (B) keys on the keypad. This will allow a user to cycle though the programmed channels.

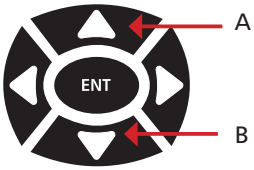

Portrait mode

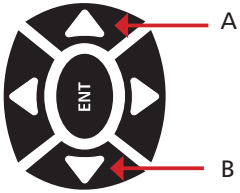

Landscape mode

2. From the transceiver home screen, press the channels button. This brings up the Channel Selection menu and shows all of the channels programmed into the transceiver in one place. Tap a channel to select it.

Channels

Holding down this channel button opens the Channel information screen which displays all of the settings for the channel currently selected.

If there are no channels programmed into the transceiver, turn to page 66 for instructions on channel programming.

Alternately, to search for a specific channel, tap  and type in the number of the channel as programmed in the transceiver eg. typing 4 will select channel 4.

Making a Voice Call

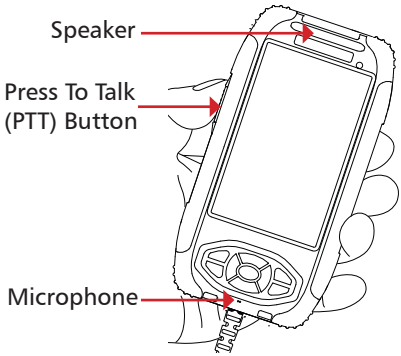

When Using the Microphone:

1. Press and hold the PTT (transmit) button only while talking
2. Position the microphone close to your mouth
3. Speak clearly
4. Use the word "over" to indicate that you have finished speaking, and then release the PTT (transmit) button.

Notes:

- *The Barrett PRC-4090 has a transmit time-out facility. This facility (when programmed) allows the transmitter to be keyed in transmit mode with the PTT (transmit) switch for a set time period, after which the transceiver switches to receive until the PTT (transmit button) is released and re-keyed. This facility prevents the transmitter transmitting for long periods of time if, for example, the microphone becomes jammed between seats in a vehicle causing the PTT (transmit) switch to be held down. Enabling, disabling and changing the time of the transmit timeout facility can be set either when programming the transceiver or in the RF Section of the Settings menu. See page 94.*
- *The microphone up / down buttons can be configured for channel change or volume control functions either when programming the transceiver or in the General Section of the Settings menu. See page 62.*

Making an Emergency Call

Note: Emergency Channels must be programmed using the Barrett PRC-4090 HF SDR Programming Software (P/N BCA40001).

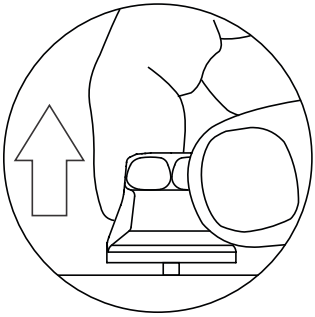

All Selcall emergency calls are transmitted by simultaneously pulling and twisting the on/off switch to the Emerg. Setting and releasing the switch. Emergency transmission will begin immediately. The LED indicator will flash slowly before transmission starts and become solid green upon transmit.

An emergency call can also be initiated by pressing and holding the CALL and BACK keys simultaneously.

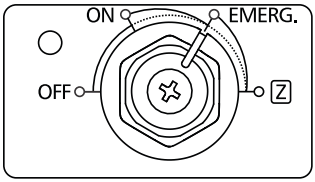

If the Emergency call is not enabled on the transceiver, an error message will appear and the emergency call will not be sent.

The action of the emergency call depends on how the transceiver has been programmed. For example:

- Selective Call that transmits and automatically changes to a selection of channels.
  Transmits the emergency Selcall sequence on each of the maximum of 20 channels programmed as emergency channels. There is a pause between calls allowing the operator to listen for an acknowledgment coming back. After the Emergency call is attempted on all the preprogrammed emergency channels the transceiver will go back into scan mode (if scanning is available) or stay on the last channel selected before the Emergency call was initiated.

  If a GPS receiver is fitted and enabled, the GPS position is also sent with the call.

  Note: After the emergency call has been sent, there is no indication that a call has been sent for security purposes.

- Royal Flying Doctor Service (RFDS) alarm

  Two-tone alarm 880 Hz + 1320 Hz continuous (Australian use only) – alerts the Royal Flying Doctor Service on RFDS channels.

  1. Select a channel with RFDS as the Selcall format.

2. Simultaneously pull and twist the on/off switch to Emerg. and release the switch.

   The RFDS alarm will continue transmitting for ten seconds.

   To cancel the RFDS alarm, press the **PTT** button or the BACK button.

Receiving an Emergency Call

On receipt of an emergency Selcall, a distinctive audio alarm is emitted and the following message displayed.

If the transceiver sending the emergency Selcall is fitted with a GPS receiver, the position will also be displayed.

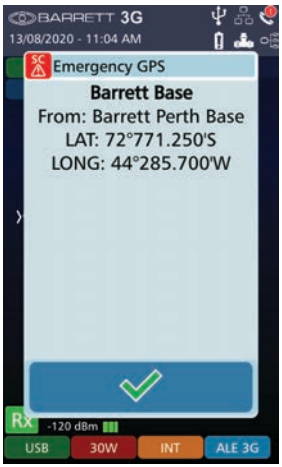

SELCALL 3

This chapter contains the following sections:

- Overview
- Important Selective Calling Information
- Summary of Calling Systems
- Setting up a Self ID
- Setting up Contacts
- Making a Selcall
- Advanced Selcall

Overview

This chapter covers all types of Selcall available on the Barrett PRC-4090 transceiver. All of these options are not available in all countries and may need to be purchased separately.

Selcall or Selective calling is a type of digital signal for HF networks. It utilises a type of squelch protocol where the transmission begins with a brief sequence of audio tones.

There are several different types of Selective Calling Systems available in addition to simple point-to-point HF communications.

The calling systems available for the transceiver are listed below:

- International (INT) - A four and six digit Selective Call system, fully interoperable with the UN format published in September 2004 and fully backwards compatible with all previous Barrett four and six digit Selcall protocols.
- OEM - A four and six digit Selective Call system compatible with other major HF manufacturers including those using encryption. Includes Selcall, Telcall, Beacon Call, Emergency call, Pagecall and GPS call.
- CCIR - A four digit Selective Call system as specified by CCIR-493.
- RFDS - Royal Flying Doctor Service (Australia Only)
- ARINC - Aeronautical Radio INC.

Important Selective Calling Information

Selcall Self IDs

The PRC-4090 transceiver can hold up to 14 different Selcall Self IDs assigned to it. These Selcall IDs can be any combination of four or six digit OEM or INT type ID.

Selcall Decode

The transceiver has the ability to decode both OEM and International Selcalls on any channel programmed as a Selcall channel. However, the call must be addressed to the relevant ID (OEM or INT).

Calls for each format type will only be decoded if there is at least one Self ID of that format programmed into the transceiver Self ID group.

Selcall Transmit

Selcall formats in transmit are channel specific. For example, only call types programmed for the channel are permitted. This means International format calls can only be sent on channels that are programmed as International Selcall channels. OEM calls can only be sent on channels that are programmed as OEM Selcall channels

Special Notes for the OEM Selective Call Protocol

- Six digit OEM calls will only be decoded by other Barrett transceivers fitted with the OEM Selcall protocol or other manufacturer's transceivers that use DES56 encryption. This does not require an export permit.
- Four digit OEM calls will be decoded by Barrett 950 and 2050 transceivers using the International Selcall (four and six digit) and other manufacturer's transceivers with similar CCIR-493 based Selective Call systems.
- Four and six digit GPS and Status data calls use the OEM privacy key to encrypt the data. If this eight digit key has not been programmed by the programming software, a default privacy key of 99999999 is automatically used for transmission.
- Four and Six digit Page calls also use the privacy key but unlike the other calls, the user has the option to manually enable or disable the privacy key. When disabled, the data is sent as plain text.
- Emergency GPS calls are automatically sent as plain text (four and six digit).

Summary of Calling Systems

Call Type	International	OEM
Emergency Call	Yes	Yes
Beacon Call	Yes	Yes
Selcall	Yes	Yes
Telcall	Yes	Yes
ARINC Call	Yes	Yes
Page Call (SMS)	Yes	Yes
GPS Call (Data & Request)	Yes	Yes
Secure Call	Yes	No
Status Request Call	Yes	Yes

The three most commonly used calls are Beacon Call, Selcall and Telcall. The other calls are more advanced and can be found in the Advanced Selcall Functions section of this chapter on page 47.

Selective Call - Beacon Call

Beacon Call allows the Operator to determine the signal quality between their station and the station they want to call on a particular channel, but without actually alerting the station they are doing so.

Selective Call - Selcall

Selcall is a signalling system based on standard CCIR-493 for use on HF networks. Each station in a HF network can be assigned up to 14 Self IDs of which there can be a mixture of four and six digit IDs. The station can be called using any of these self IDs.

It functions as a hailing or alert system i.e. a HF transceiver (Station A) can send a Selcall to another transceiver (Station B). This will alert the operator at Station B that Station A is contacting them.

Selective Call - Telcall

Telcall uses this Selective Call system to transport a telephone number from a station on a HF network to a base station equipped with a telephone interconnect unit to initiate phone calls onto the international telephone network.

Note: For Selcall and Telcall functions to operate, the channels being used must be enabled for Selcall operation.

Setting up a Self ID

1. From the Settings menu, tap the Selcall icon.

2. Tap Default Int Selcall ID (4 digits). This will set up a 4 digit ID.

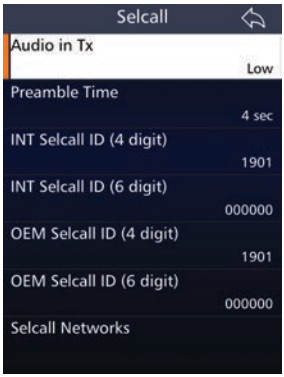

3. Type in a four digit number. This will either be provided to you by your network provider or an original ID may be able to be used if it does not conflict with another ID on the network.

The procedure is the same for the Default Int Selcall ID (6 digits), OEM Selcall ID (4 digits) and OEM Selcall ID (6 digits).

Note: Having both a four digit and the six digit ID is not required, either would still allow successful operation. It is recommended that the four digit or six digit INT and OEM IDs be the same for easy self identification.

A list of all of a transceiver's current IDs can be found under Selcall Networks in the Selcall menu.

This shows all the current Selcall IDs for a transceiver and the networks that they are attached to, see page 56.

Setting up Contacts

1. From the Settings menu, tap the Contacts icon.

2. To add a new contact tap the + button on the left of screen.

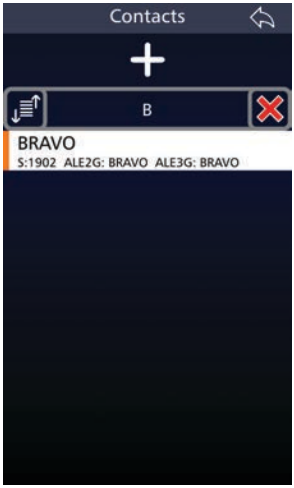

The following menu will open:

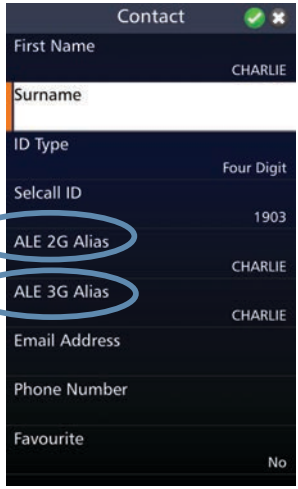

Will not be described in this manual. See ALE 2G and ALE 3G User Guide (P/N BCM40524)

From this menu, enter a name for this contact. Both first name and last name do not have to be completed.

ID type, refers to the type of ID the transceiver you are inputting has, whether it be 4 digit, 6 digit or ARINC. Select which is appropriate and enter the Selcall ID.

An email address and phone number can also be entered. Once again these do not have to be entered for basic functionality of the transceiver.

To favourite this contact, select yes under Favourite.

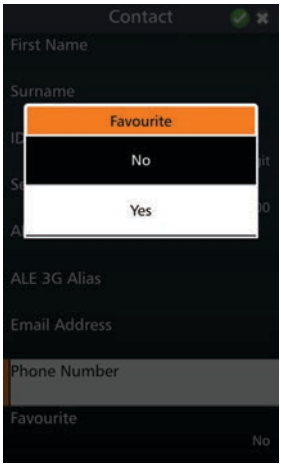

3. To save the contact,tap the in the top right hand corner of the screen and select yes.

Additional Contact Information

Searching Contacts

The contacts list can be sorted alphabetically by first name using the icon shown on the right, located on the left hand side of the Contacts screen.

Either tap  or press  or  to display the results of the search.

The icon on the left of the search bar clears the search and the icon on the right performs the search again.

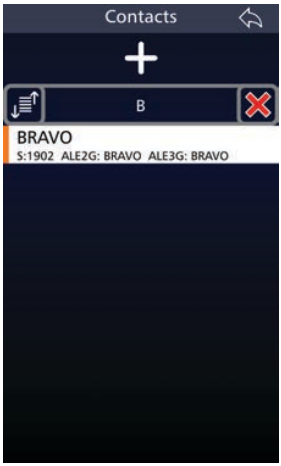

Editing Contacts

To edit contact details, select the desired contact by using the  and  keys and either tap the contact or press  from the keypad

The Edit Contact screen displays. Select and change the desired settings.

Deleting Contacts

From either the Settings<Contacts screen or the Call<Contacts screen, tap and hold a contact to trigger the Delete Contact screen. To delete the contact, select Yes, or select No to cancel the operation.

Making a Selcall

Before making a Selcall, ensure the transceiver is not scanning channels and select a Selcall channel. For more information regarding channel selection and basic voice calls, see Chapter 2 - Basic Operation (page 13).

Use the CALL key to access the Manual Call screen.

From this menu, Selcalls, Contacts, Favourites and Call History can be accessed.

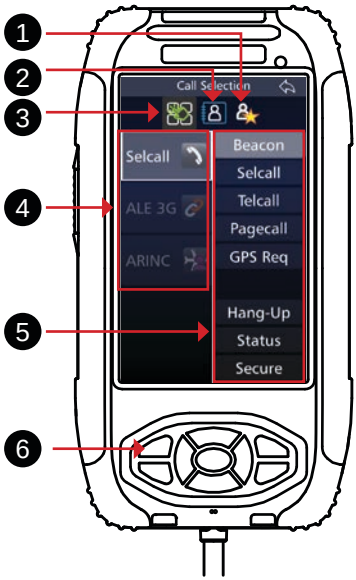

1. Contacts - Favourites
2. Contacts
3. Call Type Selection Menu
4. Call Type
5. Call Sub-types
6. Call Key

Beacon Call

Beacon Call allows the operator to determine the signal quality between their station and the station they want to call on a particular channel, but without actually alerting the station they are doing so.

When a Beacon Call is sent to another station, and if the channel being used is open, the remote station sends back a distinctive four-tone revertive signal. The operator can judge the quality of the channel for communications purposes by the strength and clarity of this distinctive tone. Using Beacon Calls on several available channels will determine which channel is best to use for subsequent Selcalls or Telcalls.

Note: both stations must be programmed for Selcall or Telcall operation.

Sending a Beacon Call

1. Listen for traffic on your selected channel. If traffic is heard, select another channel and try again.
2. Press CALL and, if necessary, press the icon to show the Call Selection screen.
3. Either:
   - Select Beacon Call, enter a Selcall Id manually and press Enter, or
   - Choose a contact from the Contacts icon and then select Beacon Call.
4. Wait for the Beacon Call to be sent and listen for the distinctive four-tone revertive signal from the station you have called.

- If a revertive tone is not heard, or is difficult to hear, try another channel and repeat the process until the revertive tone is clear.

Receiving a Beacon Call

When a transceiver receives a beacon request call, it responds by transmitting the Beacon Call revertive tones. No indications occur on the transceiver. Beacon Calls are not saved in the Selcall History.

Selcall

Sending a Selcall

1. Select the channel to send the Selcall on (Beacon Call can be used to determine the best channel)
2. Listen for traffic on that channel. If traffic is not heard, continue.
3. Press CALL and, if necessary, press the icon to show the Call Selection screen.
4. Either:
   - Select Selcall, enter a Selcall Id manually and press Enter, or
   - Choose a contact from the Contacts icon and then select Selcall.
5. Wait for the Selcall to be sent and listen for the revertive signal that indicates the call was successful.
   - If a revertive tone is not heard or was difficult to hear, try another channel and repeat the process until a good channel is found.
   - If a revertive tone is heard but you receive no verbal response from the station, it may be because the Operator is unavailable at the time.

Receiving a Selcall

Note: To receive a Selcall your transceiver must be programmed for Selective Call (Selcall) and where multiple channels are in use the scan function should be activated.

When you receive a Selcall, your station sends a revertive tone (to alert the calling station that its call was received), an audible alarm sounds, the mute (squelch) (if selected) opens and the display shows who the call is from.

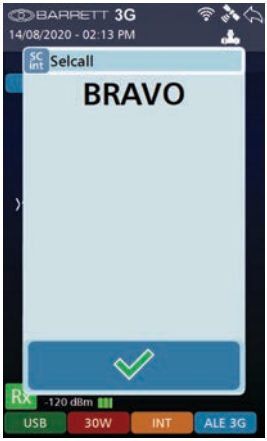

The audible alarm will sound for 60 seconds unless acknowledged and then time out. To cancel the alarm and acknowledge the call, press the PTT button or tap ✓. If the audible alarm times out, the missed call icon displays and a periodic audio reminder is emitted.

For details of previously received Selcalls, press and hold CALL to display the Advanced Call History screen. Refer to the Advanced Call History section on page 43.

Telcall

Telcall uses the digital Selective Call system to send a telephone number on an HF network. Telcalls are primarily used to send to stations equipped with a telephone interconnect unit to initiate phone calls onto the PSTN.

Note: For Selcall and Telcall functions to operate the channel must be enabled for Selcall operation.

Sending a Telcall

1. Select the channel to send the Telcall on. This will be the channel provided by your network administrator to contact the interconnect.
2. Press CALL and, if nessecary, press the icon to show the Call Selection screen.
3. Either:
   - Select Telcall, enter the selcall ID of the interconnect, select Enter phone number, enter the phone number manually and press Enter, or
   - Choose a contact from the Contacts icon and then select Telcall. Enter the Selcall ID of the Interchange, choose Select from Contact and select contact.
4. Wait for the call to be sent and listen for the revertive signal that indicates the call was successful.
   - If a revertive tone is not heard try another channel and repeat the process.
   - If the destination station is connected to a telephone interconnect, when the call is successful, wait for the telephone connection to be made and then proceed with the call.
5. Perform a Hangup Call to disconnect from the interconnect (refer to page 55 for more information on Hangup Calls).

Receiving a Telcall

Note: To receive a Telcall your transceiver must be programmed with a Self ID and where multiple channels are in use the scan function should be activated.

When you receive a Telcall, your station sends a revertive call (to alert the calling station that its call was received), an audible alarm sounds, the mute (squelch) (if selected) opens and the Telcall screen displays.

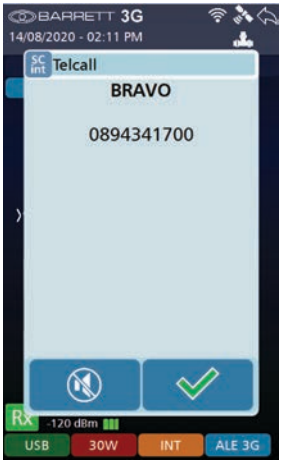

The Telcall screen shows the Selcall ID and telephone number of the caller.

Tap to stop the audible alarm but maintain the Telcall screen.

Tap To close the Telcall screen.

The audible alarm will sound for 60 seconds, unless acknowledged and then time out. To cancel the alarm and acknowledge the call, press the PTT button or tap either or (described above). When the audible alarm times out, the call received icon displays and a periodic audio reminder is emitted.

For details of previously received Telcalls, press and hold CALL to display the Advanced Call History screen.

Advanced Call History

Advanced Call History is a log of all Selcall, ALE 2G and ALE 3G call types stored in the transceiver handset. The log has the time of transmission, frequency and IDs of the transmitting and receiving transceivers recorded with every entry. Advanced Call History also has a 'return call' feature that directly links the call history with the transceivers call functionality whilst pre-entering the information from the selected call entry.

The Call History is also directly connected to the transceiver's contact settings, allowing calls from the same contact to be collated together - regardless of call type. This can be toggled on or off in the Call History menu.

Call History Menu

The Call History menu can be accessed via **Settings** < **Call History**.

From this menu, the Advanced Call History can be accessed, deleted, updated and the collation of the call history by contact can be toggled on or off. Update advanced call history will only appear when using a remote control application (see IP Connectivity Guide P/N BCMPRC-40907).

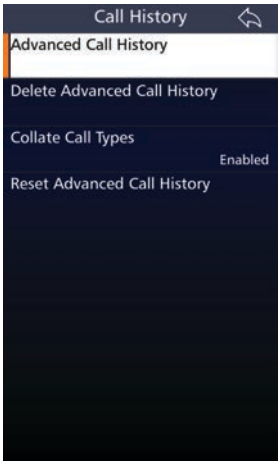

Enabling the Collate call types function will group calls from the same contact together - regardless of call type (Sellcall, ALE 2G or ALE 3G) - based on the contacts entered into the transceiver via either the programming software or the transceiver handset (see page 34 for further details on creating contacts).

Disabling the Collate call types function will collect calls in threads based on the call type (Selcall, ALE 2G or ALE 3G) and sender regardless of whether they are entered as a contact.

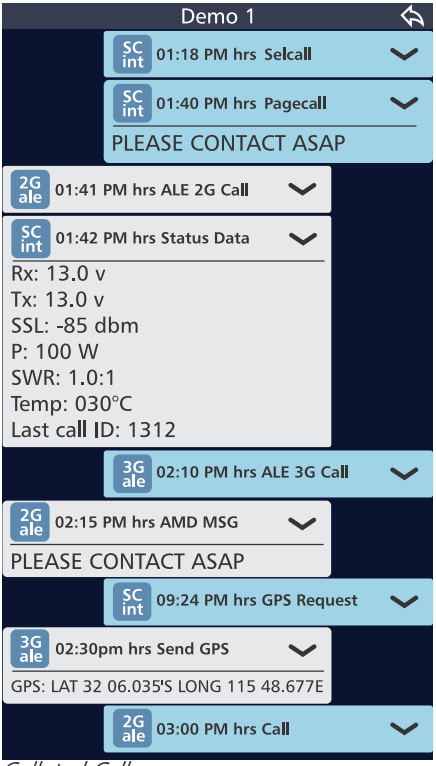

Collated Calls

Pressing an arrow reveals further information about a call including frequency, channel number, as well as to and from addresses.

Uncollated Calls

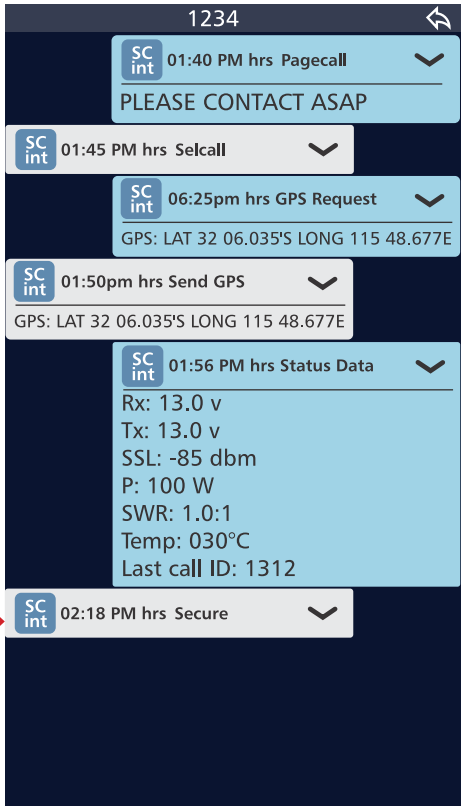

Pressing a call bubble within a thread will initiate the return call process to the sender.

Please note that this function is unavailable for ALE 2G and 3G NetCalls.

Advanced Call History Menu

This menu can be accessed by either pressing and holding the **Call button for 2 seconds** or via the **Settings < Call History Menu**. Both display the same features and have the same functionality.

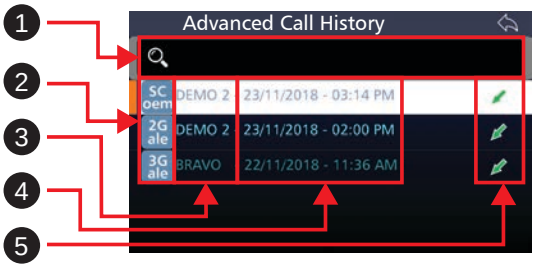

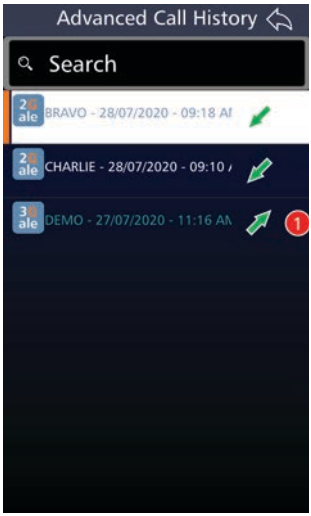

Uncollated Calls

1	Search	The Search function allows an operator to search the following fields: first name, surname, phone number or email address of a contact; Selcall ID, ALE 2G or ALE 3G alias; date or time of call or data type call (GPS, status, pagecall).
2	Call Type	The call types are outlined in the table below.
3	ID or Alias	This is the ID, address or Alias of the remote transceiver that the local transceiver is/was communicating with.
4	Date and time	The date and time of the most recent call in a thread are displayed here.
5	Incoming or Outgoing call	The arrows display whether the last call in the message thread was a transmitted, received or missed call.

Icon	Description
	Call transmitted
	Call Received
	Missed Call
5	Missed Call count
	Call sent and delivered at other station * For 2G and 3G only
	Call sent but not delivered at receiving station *for 2G and 3G only. The red cross indicates non-delivery as a default state until a call sent acknowledgment is received.

Icon	Description
SC int	Selcall INT format
SC oem	Selcall OEM format
SC CCIR	Selcall CCIR format
SC RFDS	Selcall RFDS format
SC ⚠	Emergency Selcall format
2G ale	ALE 2G format
3G ale	ALE 3G format

Advanced Selcall Functions

The Selcalls and settings in this section are less commonly used than those previous but are useful in all manner of situations.

Selcall Settings

From the Settings menu, select Selcall to view the Selcall Settings for the transceiver.

The following menu displays:

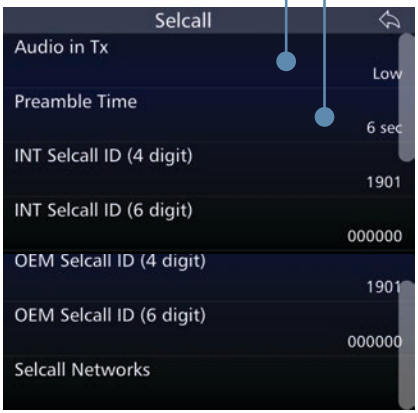

The volume of the Selcall audio during Transmit. It can be Selected as Low, High or Off.

The length of the Selcall preamble. 500ms are recommended per channel in the scan group + 1 second.

Default 4-digit INT Selcall ID. Identifies the transceiver to other users when using an INT channel.

Default 6-digit INT Selcall ID. Identifies the transceiver to other users when using an INT channel.

4-digit OEM Selcall ID. Identifies the transceiver to other users when using an OEM channel.

6-digit OEM Selcall ID. Identifies the transceiver to other users when using an OEM channel.

A list of the transceiver's Selcall IDs on saved Selcall Networks. Can be modified.

Pagecall

Pagecall (SMS) allows messages of up to 32 characters in INT format, or 64 characters in OEM format to be sent to or received from other transceivers with Pagecall facilities.

Sending a Pagecall

1. Select the channel on which to send the Pagecall (Beacon Call can be used to determine the best channel)
2. Listen for traffic on that channel. If traffic is not heard, continue.
3. Press CALL and, if nessecary, press the icon to show the Call Selection screen.
4. Either:
   - Select Pagecall, enter the selcall ID of the transceiver you wish to contact, type in the message and press Enter, or
   - Choose a contact from the Contacts icon and then select Pagecall. Type in the message and press Enter.
5. Wait for the call to be sent and listen for the revertive signal that indicates the call was successful.
   - If a revertive tone is not heard try another channel and repeat the process.

Receive a Pagecall

When a Pagecall is received, an audible alarm sounds, any mute is disabled and the Pagecall screen displays

The Pagecall screen shows the Selcall ID and message.

Tap to stop the audible alarm but maintain the Pagecall screen.

Tap To close the Pagecall screen.

The audible alarm will sound for 60 seconds and then time out. To cancel the alarm before the time out period, and to acknowledge the call press the PTT button or tap either  or  (described above). When the audible alarm times out, the call received icon displays and a periodic audio reminder is emitted.

When the audible alarm times out, the call received icon displays.

This message can be retrieved from the Advanced call history menu (see page 45).

GPS Request

Use this option to request a remote station's GPS position. Information from the remote station will be either the latest GPS position of the station or 1 of 2 error messages:

- "GPS Unresponsive" - where data is not being received or invalid data is received from the GPS unit connected to the remote station.
- "GPS Not fitted at Remote Station" - where the remote station does not have a GPS unit connected to it.

Sending a GPS Req

1. Select the channel on which to send the GPS Req (Beacon Call can be used to determine the best channel)
2. Listen for traffic on that channel. If traffic is not heard, continue.
3. Press 

4. Either:
   - Select GPS Req, enter the selcall ID of transceiver you wish to contact and press Enter, or
   - Choose a contact from the Contacts icon  and then select GPS Req.

5. Wait for the call to be sent and listen for the revertive signal that indicates the call was successful.

   - If a revertive tone is not heard try another channel and repeat the process.

6. The receiving station will transmit it's position if fitted with a GPS receiver.

   The GPS Data screen displays the caller's Selcall Alias (or alternately, their Selcall ID)

   To stop the alarm sounding but keep the display, press . To close the screen, press .

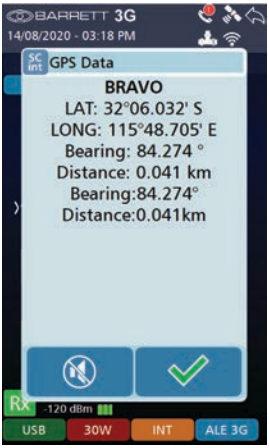

GPS Position

Use this option to send your GPS position to another station.

A GPS receiver must be connected and receiving position information when using the GPS call option.

Sending a GPS Pos

1. Select the channel on which to send the GPS Pos (Beacon Call can be used to determine the best channel)
2. Listen for traffic on that channel. If traffic is not heard, continue.
3. Press CALL
4. Either:
   - Select GPS Pos, enter the selcall ID of transceiver you wish to contact and press Enter, or
   - Choose a contact from the Contacts icon and then select GPS Pos.
5. Wait for the call to be sent and listen for the revertive signal that indicates the call was successful.
   - If a revertive tone is not heard try another channel and repeat the process.

Note: If the display indicates that the GPS is unavailable, you cannot select the Selective Call function GPS Pos.

Status Call

A Status call allows the operational status parameters of any Barrett transceiver fitted with Selcall to be accessed. This status is sent from the remote transceiver as a Selcall with the status information embedded within the Selcall structure. Information retrieved for remote diagnosis of transceiver performance includes:

- Selcall ID
- Receive state battery voltage
- Last transmit state battery voltage
- Signal strength indication of received status request Selcall
- Forward power output level
- VSWR of the antenna
- Temperature
- Selcall ID of the last radio called.

Sending a Status Call

1. Select the channel to send the Status Call on (Beacon Call can be used to determine the best channel)
2. Listen for traffic on that channel. If traffic is not heard, continue.
3. Press CALL
4. Either:
   - Select Status, enter the selcall ID of transceiver you wish to contact and press Enter, or
   - Choose a contact from the Contacts icon and then select Status.
5. Wait for the call to be sent and for the remote station to return its status data.

If a reply is not received, either repeat the process or change the channel and repeat.

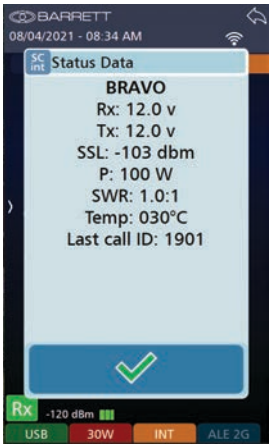

Secure Call

The Secure Call option provides the transceiver operator with a secure speech path using an in-band hopping technique. Secure Call is simple to use requiring each radio to be setup with the same four digit "Selcall Secure Call Code".

Features:

• The Secure Call is limited to point to point and point to multi point (group call) communications between radios within a network.

• If any radio drops out of the secure call, it is not possible to re-enter the secure call. Operators can re-establish the link following the Secure Call method.

Secure Call Codes

A Secure call code is necessary to make a successful secure call. Create a Secure Call Code via Settings, Security, Secure Call Code. Type a 4 digit number.

Note: The 4 digit secure call code must be the same for both the transmitting and receiving stations.

Sending a Secure Call

1. Select the channel to send the Secure call on (Beacon Call can be used to determine the best channel)
2. Listen for traffic on that channel. If traffic is not heard, continue.
3. Press CALL
4. Either:
   - Select Secure, enter the selcall ID of transceiver you wish to contact and press Enter, or
   - Choose a contact from the Contacts icon and then select Secure.

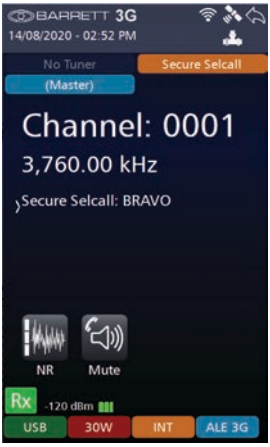

5. Listen for the secure call revertive tone from the called station which indicates the call was successful.

Note: The secure call revertive tone has a different sound to the revertive tones of the other call types.

If the revertive tone was not heard or was difficult to hear, try another channel and repeat the process.

Now the transceivers can communicate securely using a voice call. Other users on the frequency will only hear garbled speech.

To exit secure mode, a Hangup call will need to be sent, or the BACK key pressed (disconnects local station only).

Hangup Call

When a call to a telephone interconnect base station has completed or a secure call link is complete, the operator should 'hang-up' by sending a hang-up call.

Sending a Hangup Call

1. Press CALL
2. Select Hangup and the Hangup call will be sent out. The transceiver will use the destination ID when sending the call from the initiating transceiver or the source ID when sending from the receiving transceivers. Listen for hang-up revertive tone which confirms the disconnect was successful.

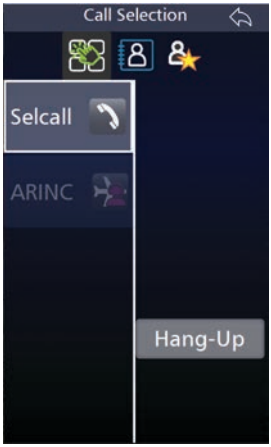

Selcall Networks

The Selcall Nework screen is a list of the transceiver's 4 and 6 digit IDs on various HF networks. These are programmable and up to 5 networks can be stored on the transceiver.

Creating a New Selcall Network

1. Access the menu via **Settings** and **Selcall**. Select **Selcall Networks**.

2. Tap the + symbol to create a new Selcall Network.
3. Selcall Network Alias refers to the name of the network on your transceiver. This is not read or transmitted by any external transceivers or displayed when you transmit.

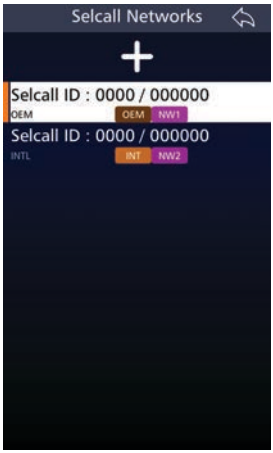

4. Selcall Format chooses whether the network transmits over INT, CCIR, OEM or RFDS frequencies. All transceivers in the network will need to be the same in order to transmit between each other.
5. The Selcall IDs on each network may be specific to each network. These will generally be provided by the network administrator.
6. Select the green tick and then Yes to save the Network.

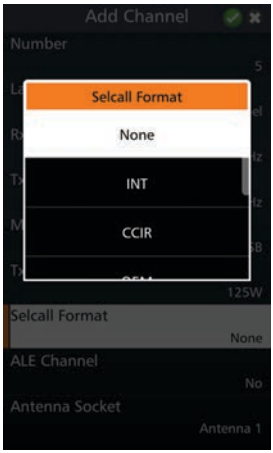

Editing an Existing Selcall Network

To edit a Selcall Network, select the desired network and either tap the network or press ENT from the keypad.

The Selcall Network screen displays. Edit the details as described above (for Add a Selcall Network).

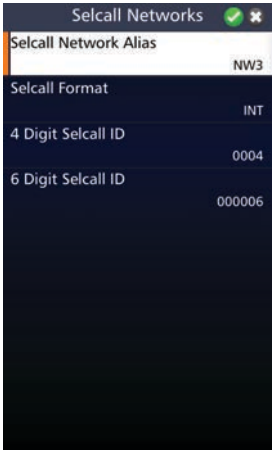

Deleting an Existing Selcall Network

Select the Selcall Network to be deleted, then tap and hold for three seconds.

A confirmation message displays.

Tap **Yes**.

BASIC SETTINGS 4

This chapter contains the following sections:

- System Information
- General Settings
- Audio Settings
- Display Settings

System Information

Select **System Info** from the Settings menu to display the System Information screen.

Head Device ID

This displays the name of the control head. This name is used to differentiate between primary and secondary heads.

Serial Number

This displays the transceiver's serial number.

Version Information

This menu provides software and firmware version numbers. Contact your Barrett provider for more information

Transceiver Options

This menu displays the active and inactive options on your transceiver.

To activate an inactive option, please contact Support at Barrett Communications at:

support@barrettcommunications.com.au.

Configuration Pack Information

This menu offers easy identification of the transceiver's current pack and when it was last updated.

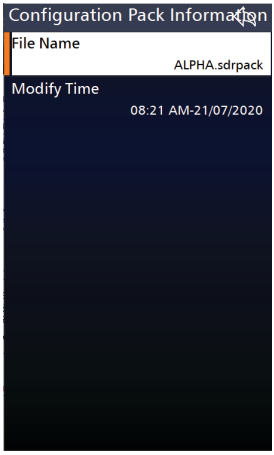

SDV/4026 Serial Number

This provides the serial number of the SDV/4026 hardware module fitted in the transceiver.

General Settings

Select **General** from the Settings menu to display the General Configurations screen.

A list of items that may be configured is displayed. To reveal more items, either swipe down on the touch screen or press ▼.

A brief description of each of the items which may be configured is described beneath the items.

The current status of each of the items is displayed on the right.

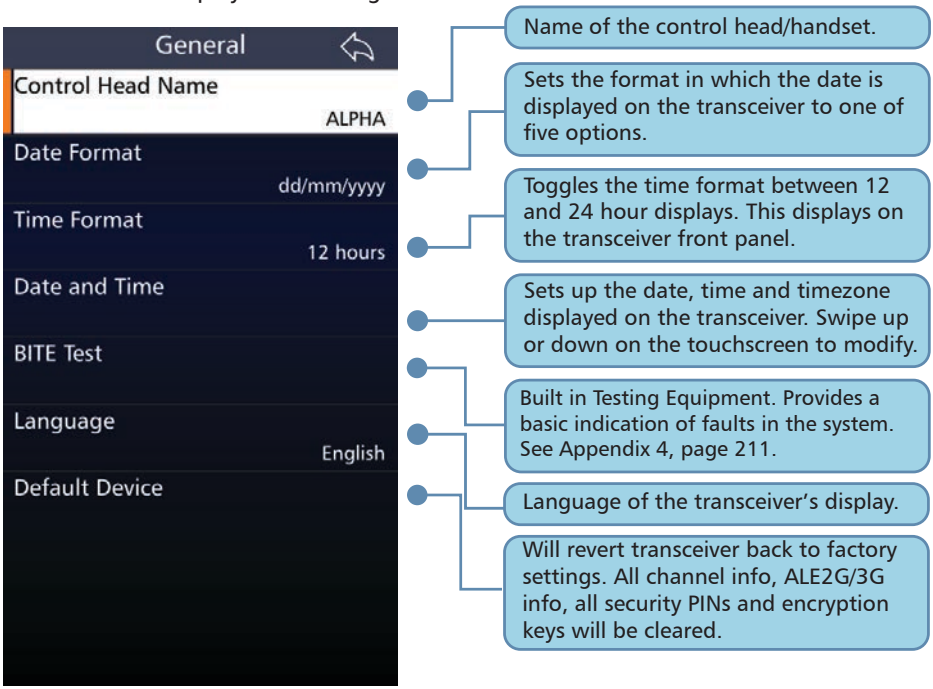

Audio Settings

Tap **Audio** from the Settings screen to display the Audio screen.

A list of items that may be configured is displayed.

A brief description of each of the items is described beneath the items.

The current status of each of the items is displayed on the right.

To reveal more items, either swipe down on the touch screen or press .

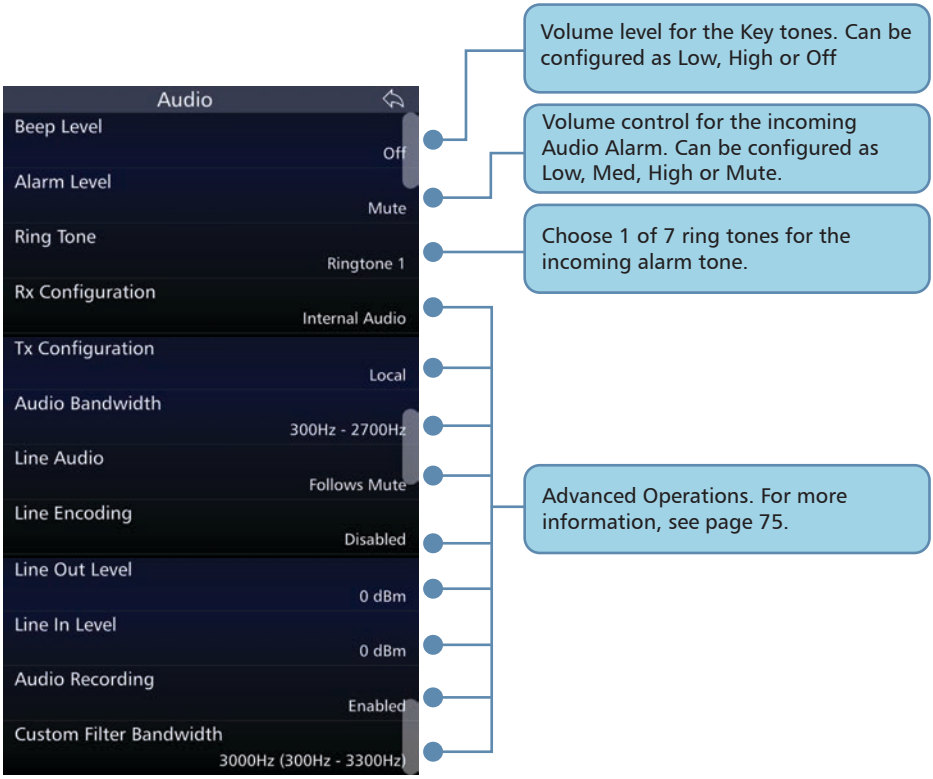

Display Settings

Tap **Display** from the Settings screen to display the Display screen.

A list of items that may be configured is displayed.

A brief description of each of the items is described beneath the items.

The current status of each of the items is displayed on the right.

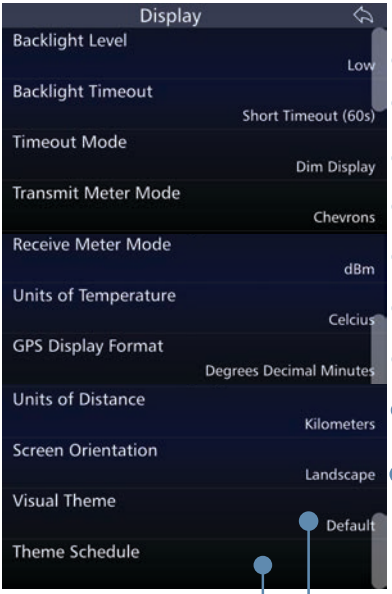

Adjusts the brightness of the screen backlight. Can be configured as Low, Med, High and Very High.

Length of time before the Display timeout behaviour activates. Can be configured as Short Timeout (1 min), Long Timeout (3 min) or Always On.

Behaviour of the screen activated when the backlight times out. Shows screensaver, dims or switches off display.

The preferred unit to display the Transmit Wattage. Either Watts or Chevrons.

The preferred unit for displaying the received signal strength. dBm, uV or S Meter.

Preferred unit of temperature for the transceiver. Celcius or Farenheit.

Changes the display format for the GPS coordinates in the swipe menu

Changes the displayed units of distance for the GPS between Kilometres, miles and nautical miles.

Changes the display orientation between portrait, landscape or flipped modes.

Changes the display theme between default, red, green or dark green.

See advanced settings page 75.

PROGRAMMING 5

This chapter contains the following sections:

- Channel Programming
- Free Scroll Rx/Tx
- Programming via USB

Channel Programming

The programming of channels is restricted in some countries. In this situation, transceivers will be pre-loaded with a channel pack and this function will be locked in the transceiver menu.

If the transceiver is unlocked, there are three ways to program channels into the transceiver.

1. Manually through the transceiver's handset,
2. By inserting a USB storage device containing the appropriate files into the transceiver's USB socket (see page 73)
3. By using the Barrett Programming Software (P/N BCA40001). This option is not available in all countries. Please check with your Barrett dealer for your location. For more information on using the Barrett Programming Software, please refer to the PRC-4090 SDR Programming Manual (P/N BCM-PRC-40903).

Programming Channels Through the Handset

Tap **Channels** from the **Settings** screen to display the Channels screen.

A list of currently used channels displays. Each channel shows its channel number, frequency, and channel label.

Settings Channels

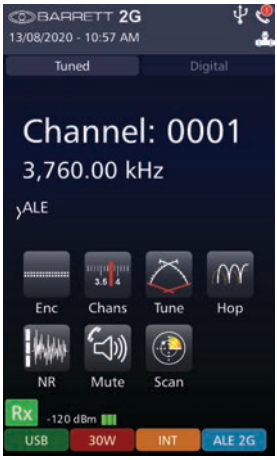

Adding a new channel

To add a channel, tap  to display the Add Channel screen.

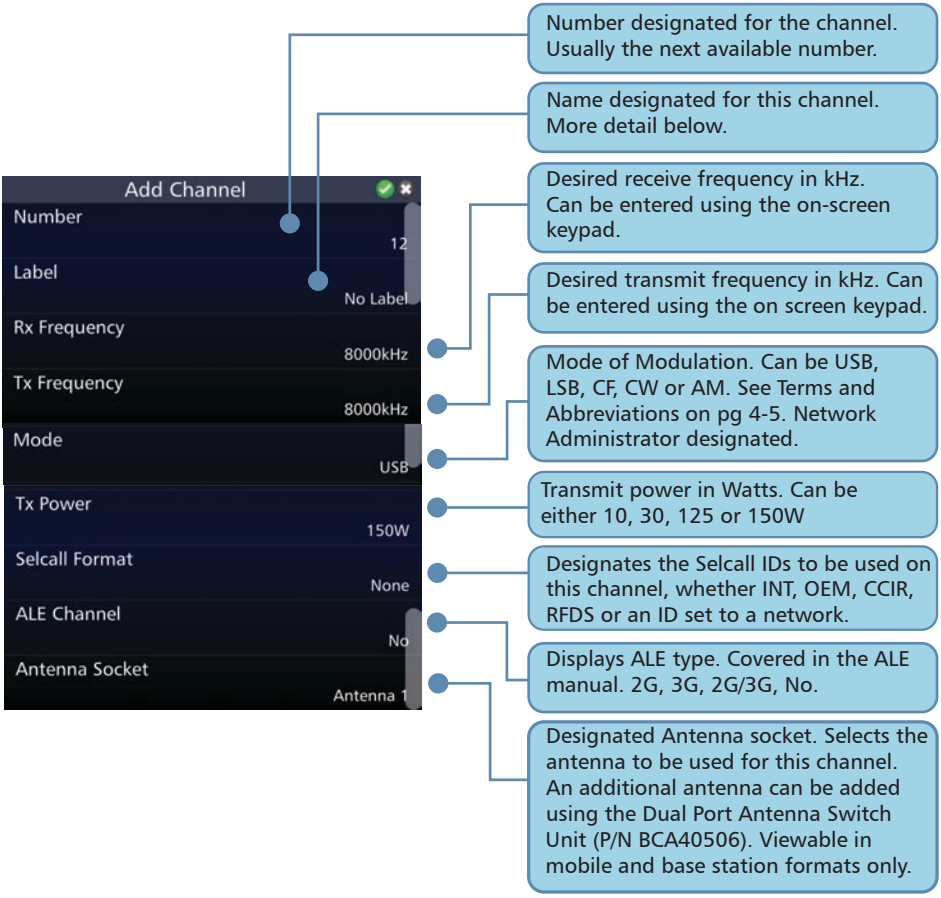

After configuring the above attributes, tap  to add the channel. A confirmation message displays. Tap **Yes**.

Editing a Channel

To edit a channel, select the desired channel by using the ▲ and ▼ keys from the Channel screen and either tap the channel or press ENT from the keypad.

The Channel Information screen displays. Edit the fields as desired.

Deleting a Channel

To delete a channel, tap and hold for three seconds the channel you wish to delete. A confirmation message displays.

Tap **Yes**.

Label

Channel labels are used to name a channel and remind a user what the channel is used for eg. UNHCR Geneva.

Channel Labels must be created under the labels menu before they can be applied to a channel.

Adding a New Label

To create a new label, tap the + icon from the Settings<Labels menu.

Settings Labels

Type the New Label using the on screen keyboard.

This label can now be added to a channel.

Editing an Existing Label

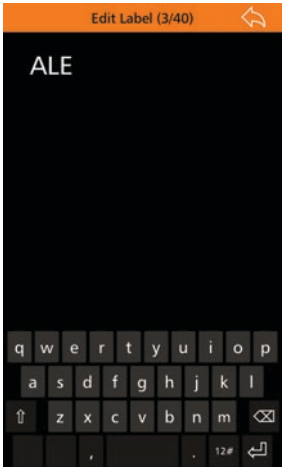

To edit a channel label from the Channel Labels' screen, select the label by using the and keys and either tap the label or press ENT from the keypad.

Use the keyboard to edit the name of the label, then tap to save.

Deleting an Existing Label

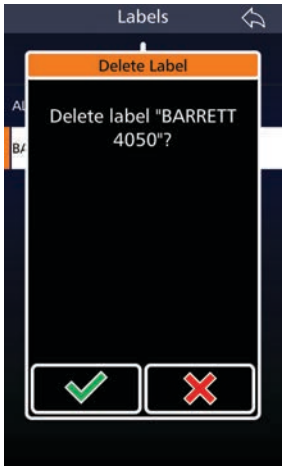

To delete a channel label from the Channel Labels' screen, select the channel label you wish to delete, then tap and hold for three seconds.

A confirmation message displays.

Tap **Yes**.

Mode

Network administrators designate usable channels and modes as one of the following:

USB - Upper Side Band.

LSB - Lower Side Band.

CF - Custom Filter.

CW - Continuous Wave (Morse code).

AM - Amplitude Modulation.

Free Scroll Rx/Tx

Frequency Selection

Free Scroll Rx is a feature that allows a user to scroll through frequencies in a receive-only capacity. If the "Free Scroll Tx" option is enabled, pressing PTT will allow transmit on the selected frequency.

From the home screen tapping the channel frequency will open the Free Scroll function.

This can be navigated in two ways:

- The directional buttons

  The left and right arrow keys change which digit is high-lighted.

  The up and down keys change the value of the highlighted digit.

- Tapping the digits

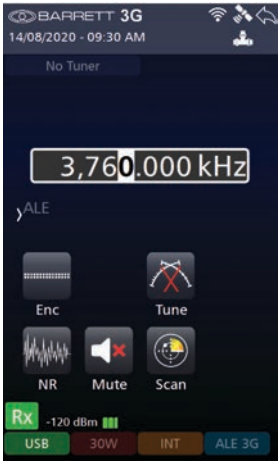

Note: The Free Scroll menu can be locked in the PRC-4090 Programming Software and, if locked, will not appear when the frequency is pressed.

Adding a Channel from the Free Scroll screen

A channel can be added directly form the Free Scroll screen. When a desirable frequency is found, pressing enter on the front panel will allow the frequency to be added at the next available channel number.

All of the fields can be set, as when programming a channel from the channel menu (see page 66).

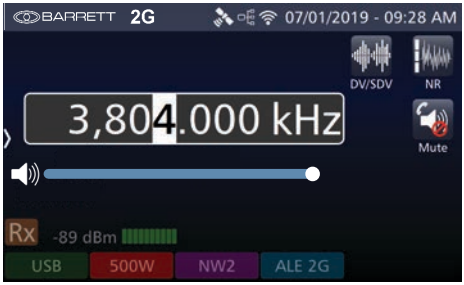

Press  to save the channel.

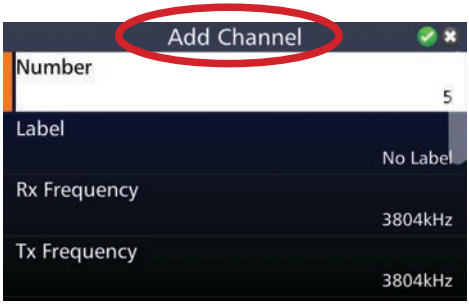

Free Scroll Scanning

By holding the Scan icon, the scan settings for Free Scroll can be set.

Scan Rate indicates the time spent on each frequency.

Scan Step Indicates the interval between frequencies scanned.

Tapping the scan icon will initiate scanning.

Scan

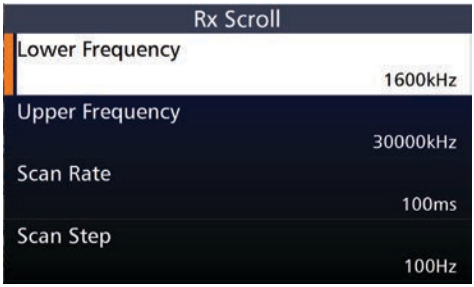

Programming Via USB

The transceiver configuration can be imported or exported as a "pack". This contains the channel configurations, ALE 2G/3G settings, scan tables, contacts and settings amongst other information.

Note: a valid USB storage device must be inserted to activate.

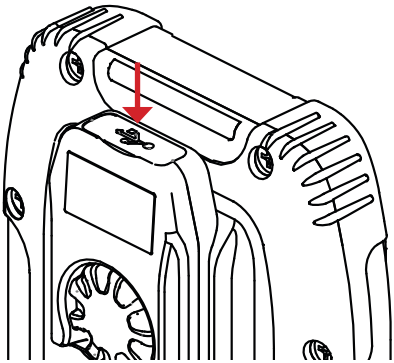

Exporting Settings to a USB

To export the device's configuration settings, insert a USB storage device into either a PRC-4090 Handset USB Interface (4090-01-27) or the Handset Docking Station (4090-05-03).

1. Tap **Settings**, then **Export**.

2. From the Export screen, tap **Export Configuration** to display the Configuration File Name screen.

   The default name displays. Use the keyboard to type an alternative name of the configuration file to export to the USB storage device.

   Tap  to save.

3. Enter an optional password to encrypt the exported pack.

4. The Export Configuration screen displays showing a progress bar confirming the progress of the export.

   When prompted, tap **OK** and remove the USB storage device.

Importing Settings from a USB

1. With a USB storage device inserted into the USB port, tap **Settings**, then **Import**.

   If the correct files are on the USB, the transceiver will recognise them and initiate the Choose Action screen.

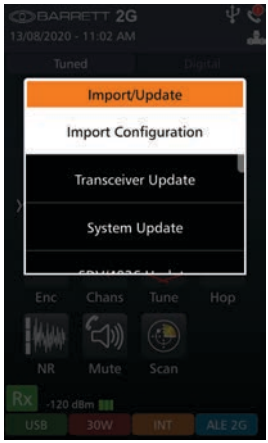

2. To update the configuration settings (pack), tap **Import Configuration** from the Choose Action screen described above.

   The Choose a File screen displays.

   Select the required file to import.

   If a password was set up for the pack, this will be required for the import to complete.

   Confirm that the call history will be replaced when the new pack is loaded.

3. The import process will then begin automatically showing a progress bar. Remove the USB storage device when prompted.

4. The importing of a pack via USB is complete.

   Note: For transceivers that are installed with the ALE 2G Option only and no other Digital Voice Options, a shutdown and restart of the transceiver will be required once a pack has been installed.

ADVANCED OPERATION 6

This chapter contains the following sections in alphabetical order:

- ARINC Call
- Audio - Advanced
- Collective Call
- Digital Voice
- Frequency Hopping
- I/O Settings
- Modes
- Mute (Squelch)
- Network
- Noise Reduction (NR)
- RF Settings
- Scanning
- Screen Capture and Re-sync
- Security Settings
- Tuning
- Zeroise

ARINC Call

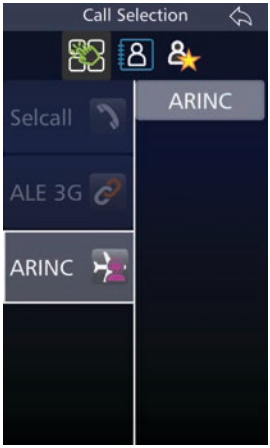

An ARINC call functions in much the same way as a Selcall. It is a hailing or alert system used exclusively to alert aircraft.

An ARINC ID is a sequence of two sets of 2 letters. Each pair must be entered alphabetically eg. AB-CD or CD-AB.

The interface does not allow invalid ARINC IDs to be entered and blanks out invalid characters.

Audio - Advanced

From the **Settings** menu, select **Audio**.

For information on Beep Level, Alarm Audio Level and Ring tones, see Basic Settings page 59.

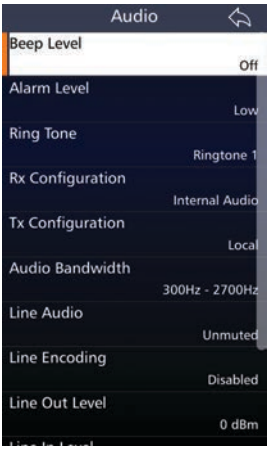

Rx Configuration

This option sets whether the transceiver receives audio via the antenna or from the Line.

Selecting “Internal Audio” ensures the transceiver receives audio through the antenna.

For “External Audio”, the transceiver receives through the auxiliary socket’s 600 ohm balanced audio port. This can be used in many situations eg for a remote receiver in split site operations and audio is received from the remote site.

Tx Configuration

This option sets whether the PRC-4090 transmits to the antenna or down the line.

When set as “local” the transceiver transmits through the antenna.

When set as “remote”, the transmit audio is sent through the auxiliary socket’s 600 ohm balanced audio port.

Audio Bandwidth

This section allows the audio bandwidth to be tailored to an operator’s requirements.

Select either:

300 Hz - 2700 Hz: used for reduced bandwidth voice operation
300 Hz - 3000 Hz: standard voice and data operation
300 Hz - 3200 Hz: recommended for use with clover waveforms
300 Hz - 3400 Hz: recommended for use with digital voice and Stanag wave forms

Line Audio

This option sets the muting condition of the 600 ohm balanced audio line output on the rear auxiliary connector.

The line output can be set to Unmuted or Follows Mute. When set to Follows Mute, the line output is muted in the same manner as the speaker output and follows the mute condition currently in use. The line output is usually set to Unmuted when using data modems. Follows Mute should be selected when the transceiver is being used with 2062 crossgate.

Line Follows Digital Voice

When this is selected, the Line audio will also be processed through the Digital Voice hardware.

Line Out Level

This setting adjusts the output level of the auxiliary 600 ohm balanced audio output port.

Line In Level

This setting adjusts the input level sensitivity of the auxiliary 600 ohm balanced audio input.

Audio Record

This option is used to monitor conversations. It utilises the line audio to listen to the received and transmitted audio. Connect an appropriate device to record the conversation using a cable (up 1.2 m in length) with connection specification below.

21 Pin Auxiliary Connector	Description	3.5mm Jack Connector Pin
7	Summed Record Audio	Tip & Ring
8	Ground	Sleeve

Custom Filter Bandwidth

This section allows the audio bandwidth to be tailored to an operator's requirements when using a custom filter.

Collective Call

Collective calls comprise of all-calls, group calls and sub-group calls which involve calling a number of Selcall IDs simultaneously. This is not an individual button in the Selcall menu as a transceiver can group call as a number of call types. For information on other call types please refer to Chapter 3 - Selcall, page 29.

All call, Group call and Sub-group call must be enabled in the Barrett PRC-4090 HF SDR Programming Software (P/N BCA40001).

Sending a Group Call

It is recommended that transceivers should be programmed with a selcall ID ending in “0” as this is used for making group calls. When prompted to enter a Selcall ID for a chosen call type, the first digits represent the groups of IDs you wish to contact.

Four Digit format

<u>All call</u>

eg. Entering 2000 will contact every transceiver on the channel with an ID that begins with “2”

<u>Group call</u>

eg. Entering 2300 will contact every ID on the channel that begins with “23”.

<u>Sub-group Call</u>

eg. Entering in 2310 will contact every ID that begins with “231”

Six Digit format

Same as above. No more than the last 3 digits can hold the 0 value.

eg. Entering 123000 will contact every transceiver beginning with “123”

Digital Voice (Encoding)


Encoding off


Encoding on

Encoding can improve the reliability of communications over noisy channels where reception of analogue voice can be very poor. Poor voice quality can be improved markedly by the use of digital voice modules to the point where barely usable frequencies are made clear. Secure Digital Voice allows users to encrypt their communications over HF therefore providing a secure HF network.

Both Digital Voice and Secure Digital Voice capability can be utilised in Barrett 4000 and 2000 series HF Transceivers using Barrett digital voice modules which are designated as:

DV	Digital Voice module with no encryption
SDV-56	Secure Digital Voice module with DES 56 encryption (No export licence required)
SDV-256	Secure Digital Voice module with AES 256 encryption (Export licence required)

Signal-to-noise ratio conditions can change during communications between HF stations. The digital voice modules have auto baud capabilities which automatically adjust baud rates up or down whilst communicating between the transceivers allowing the users to transmit and receive signals with optimal voice clarity.

For more information on Digital Voice, please consult the Barrett HF Radio Digital Voice and Secure Digital Voice Operating Manual (P/N BCM40504).

Export

The export function of the PRC-4090 is predominantly used for diagnostic purposes and diagnostic and log files can be exported and sent to Barrett Communications.

Settings Export

The Android version of the Barrett 4000 Series Remote Control App can be downloaded directly from the transceiver head. For further information please consult the Barrett 4000 Series IP Connectivity Guide (P/N BCM40507).

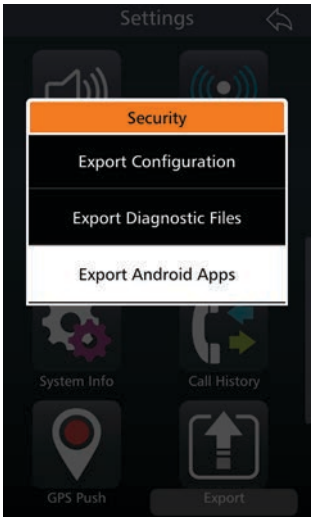

Frequency Hopping

This option requires an Export Permit.

Frequency hopping can be used to limit performance degradation due to interference and to reduce the likelihood of interception. Frequency Hopping Spread Spectrum (FHSS) is a method of transmitting radio signals by rapidly switching a carrier among many frequency channels.

The transceiver employs a unique frequency hopping system that uses an external GPS.

Note: An external GPS must be connected and providing valid data for the frequency hopping system to operate.

Selecting the Hopping Band

Select a channel as per normal. This channel and mode is used by the transceiver to determine the hop band.

Entering the Hopping PIN

This code is entered under Settings < Security (see page page 101). All of the transceivers that will be communicating on the same hopping band will need to have the same Hopping code.

Enabling and Disabling Hopping

1. Attach a GPS receiver to the rear of the transceiver.
2. Select a channel with a transmit frequency (i.e. not disabled).
3. Enter the Hopping Pin
4. Press the Hopping icon on the transceiver home screen to activate Hopping.

   Hopping voice communication can now be used.

Hop

Pressing the Hopping key for a second time (or pressing the back button) disables Hopping mode.

GPS Push

GPS Push is an additional option used in conjunction with the Barrett 4077 HF Map & Track Software and provides automated transmission of GPS location at set intervals. These intervals can be programmed using the Barrett 4000 Series Programming Software (P/N BCA40001).

For further information, please contact Barrett Communications.

GPS Push State

GPS Push state enables or disables the automatic transmission of the GPS location.

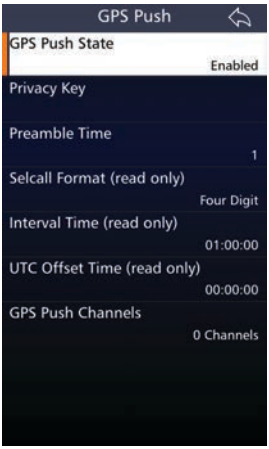

Privacy Key

This allows the input of the GPS privacy key. This privacy key allows the transmission to be DES56 encrypted, so long as the receiving station has the same privacy key in order to decrypt the transmission (DES56 encryption does not require export approval).

Preamble Time

Length of preamble transmitted at the start of the GPS Push call.

Note: Read Only items are set in the Barrett 4000 Series HF Programming Software. See the appropriate manual for more information.

IO Settings

Tap **IO** from the **Settings** screen to display the IO screen.

A list of items that may be configured is displayed.

The current status of each of the items is displayed to the right.

To reveal more items, either swipe down on the touch screen or press .

Settings I/O

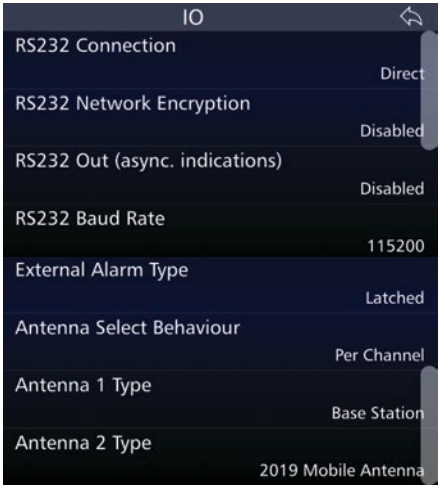

RS232 Connection

This selects whether the RS232 connection is made via a direct connection to the top hotshoe auxiliary connector on the PRC-4090 or via a network (WiFi or Ethernet - please see 4000 Series IP Connectivity/Networking Guide [P/N BCM40507]).

RS232 Network Encryption

Enabling RS232 Network Encryption secures information transfers over RS232 networked connections. Disabling this feature removes any encryption from the RS232 network.

RS232 Out (async. Indications)

This setting enables or disables RS232 status information output from the transceiver via the top hotshoe auxiliary connector.

Note: This command does not enable/disable RS232 control of the transceiver when the RS232 option is fitted. It is used to control the output of status information via RS232 used by some external programs such as vehicle tracking.

RS232 Baud Rate

This menu option allows the selection of the RS232 Baud rate.

The Baud rate setting is dependent on the external device/application connected to the transceiver.

Tap **RS232 Baud Rate** from the IO screen to display the RS232 Baud Rate screen.

Select either: 9600 or 115200.

External Alarm Type

(Not applicable to the PRC-4090) This sets the action of the external alarm output when a Selcall is received by the transceiver. It can be set to either a pulse output (for use with a horn) where the output is activated 15 seconds on, 15 seconds off; or a constant output (for use with a rotating beacon). Both are reset by pressing BACK or the PTT button.

Select either: Latched or Pulsed.

Antenna Select Behavior

This master setting can override the pre-programmed channel antenna selection. This setting is designed to be used in conjunction with the PRC-4090 System Docking Station. This is not used for Manpack configurations.

Select:

Per Channel (default): Antenna selection operates as per channel programming.

Antenna 1: All channels, regardless of programming, will transmit/receive using Antenna 1.

Antenna 2: All channels, regardless of programming, will transmit/receive via Antenna 2.

Antenna 1

For Antenna 1 see page 24.

Antenna 2

This option is only active if connected to a Dual Port Antenna Switch Unit (P/N BCA40506) which can only interface with the System Docking Station.

Note: 4075 Linear and 4075 Linear with ATU are not available for Antenna 2 Type.

Select an antenna type from the following:

Antenna Type	Select when...
Base Station	Base station antennas such as the Barrett 912 series are used. No tuning signals are emitted on channel change.
910 Mobile Ant	Using a Barrett 910 automatic tuning mobile antenna
911 Auto Tuner	Using a Barrett 911 automatic tuner
2019 Mobile Ant	Using a Barrett 2019 automatic tuning mobile HF antenna
2018 Loop Ant	Using the 2018 Mobile magnetic loop HF antenna
4011 Auto Tuner	Using a Barrett 4011 automatic tuner
4017 Auto Tuner	Using a Barrett 4017 automatic tuner
OEM Tuner	3040 tuner compatible (non-Barrett product)
OEM 2 Tuner	F2265 tuner compatible (non-Barrett product)
Disabled	Antenna 2 not used

Modes

The current mode of transmission is displayed in the lower left hand corner (green background). The example opposite shows the transceiver in USB mode.

Pressing and holding the mode will allow an operator to change the mode to USB, LSB, CF, CW or AM mode for the current channel

Note: The mode icon will only temporarily set the mode for a selected channel, reverting to that channel's programmed default mode after the channel is changed, or the transceiver is turned off.

For further information on setting up modes for channels, see page 69.

Mute

The mute function suppresses the channel noise heard by the operator. It is designed to open (allow noise) when the transceiver detects audio, a large enough signal or a call (depending on the mute type selected).


Mute

There are three types of mute available from the Home Screen.

Press and hold the active mute icon to select from one of the following three mute types:

- Voice Mute — When using analogue voice, Voice Mute allows audio only when speech is detected on the selected channel. When Digital Voice is active, Voice Mute additionally opens for digital signals.

  Note: The voice mute sensitivity can be set to three levels.

- SSL Mute — Allows audio only if signal strength exceeds the nominated threshold (analogue or digital signals).

  Note: The signal strength mute level can be set to three levels.

- Call Mute — Allows audio when a call is sent to the transceiver. When Digital Voice is also active, Call Mute allows audio only when digital voice traffic is detected.

The example opposite shows SSL Mute.

After two seconds, the Mute indicator is hidden and replaced by the channel label.

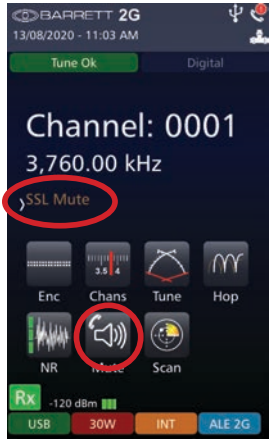

Each mute type has two primary mute states: Enabled or Disabled. However, the Enabled state can be either open or closed. Each of these states is further described below.

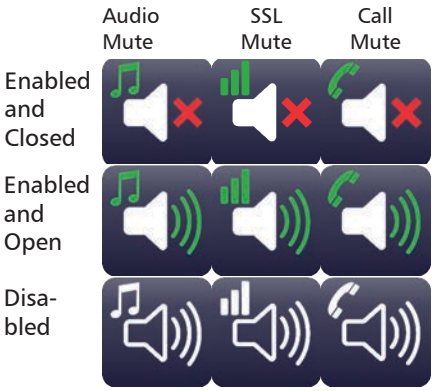

Enabled and Closed: No transmission audio is currently being detected by the transceiver. No sound is heard.

Enabled and Open: Transmission audio has been detected by the transceiver. This state is temporary and will automatically revert to mute Enabled and Closed state once audio is no longer detected.

Disabled: Audio is not censored and all noise can be heard.

Tapping the mute icon will toggle the mute state between Enabled and Disabled.

Tapping **Mute** from the **Settings** Menu displays the Mute settings screen.

Voice Mute Sensitivity refers to the "hardness" of the voice mute and its sensitivity to voice activity on a channel.

Signal Strength Level refers to the level at which the mute (squelch) opens. When set to low, the mute will open on a relatively low level of received signal. For high, the mute will open for a relatively high level of received signal.

Network

This menu can be accessed from the **Settings** menu.

The PRC-4090 HF SDR Transceiver has the ability to interface with IP networks, allowing mobile cellular handsets, tablets and desktop PCs to connect directly to the transceiver via Ethernet or WiFi with the use of specialised adapters. For more information, see the Barrett IP Connectivity and Networking Guide (P/N BCMPRC-40907).

When using a 4050/4090 Control Handset without a docking station, a PRC-4090 Handset USB Interface (4090-01-27) must be attached to the rear of the handset.

The PRC-4090 Handset USB Interface is attached as shown in the diagrams below. Once in place, turn the wheel until unit is secure.

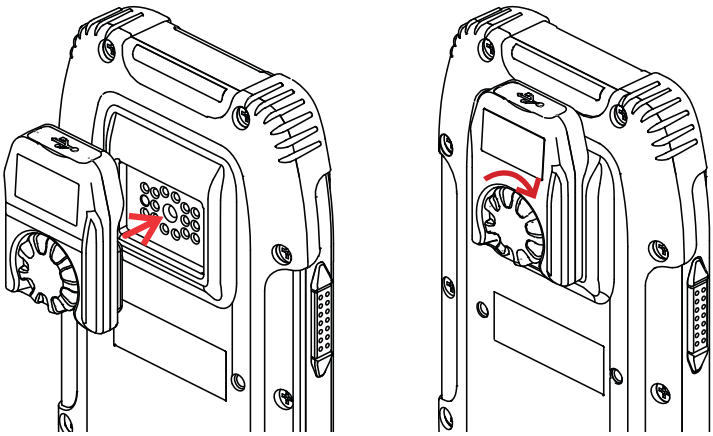

IMPORTANT: Ensure that the USB Interface Unit is attached BEFORE the USB device is inserted.

The diagram below shows the possible connections between the above PRC-4090 Control Handset and an IP network.

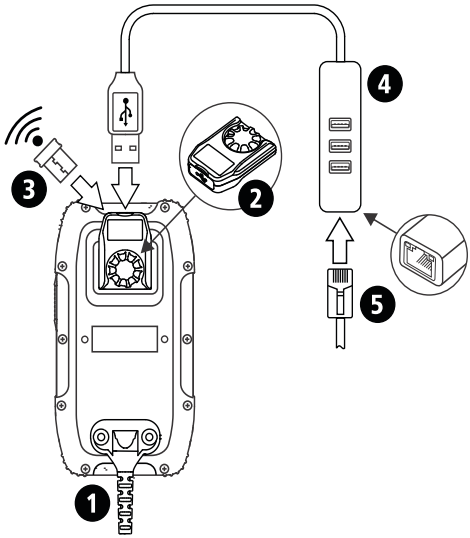

1	PRC-4090 Control Handset (P/N 4090-01-09)
2	PRC-4090 Handset USB Interface (4090-01-27)
3	WiFi Adaptor (P/N BCO40508)
4	USB to Ethernet Adaptor with USB ports (P/N BCA40505)
5	Ethernet (RJ45) cable

The below diagram shows the network connection from a Barrett PRC-4090 HF SDR Transceiver in Mobile configuration (P/N 4091-00-10).

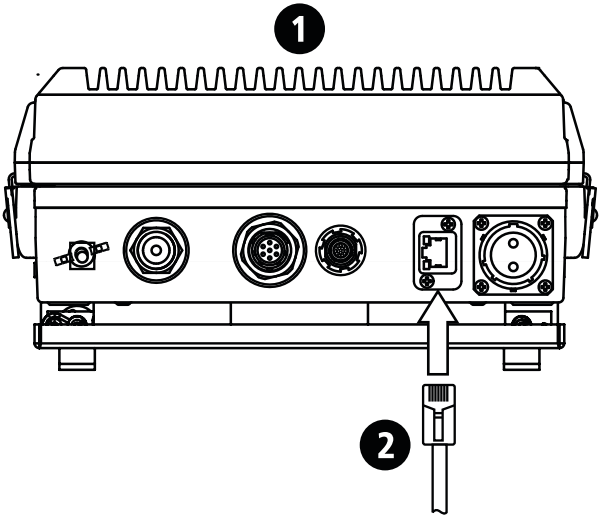

1	Barrett PRC-4090 HF SDR Transceiver in Mobile configuration (P/N 4091-00-10)
2	Ethernet (RJ45) cable

Noise Reduction (NR)

Selecting **NR** from the handset allows the Digital Signal Processor (DSP) noise reduction depth to be adjusted to suit the operator's requirements.

NR

Tap **NR** from the Home screen to cycle through the options: Off, Low, Medium, or High.

The example shows an NR set to High.

After two seconds, the NR indicator is hidden and is replaced by the channel label.

When the noise reduction system is active (low, medium or high) the NR icon displays an indication of the setting.

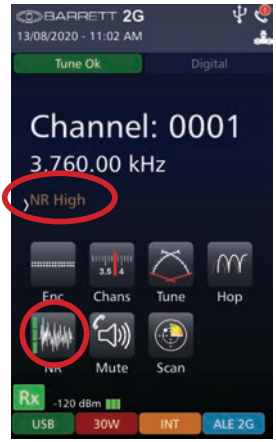

NR
Off

NR
Low

NR
Medium

NR
High

RF Settings

Tap **RF** from the **Settings** menu to access the RF menu.

A list of items that may be configured displays.

A brief description of each of the items is described beneath the items.

The current status of each of the items is displayed to the right.

To reveal more items, either swipe down on the touch screen or press ▼.

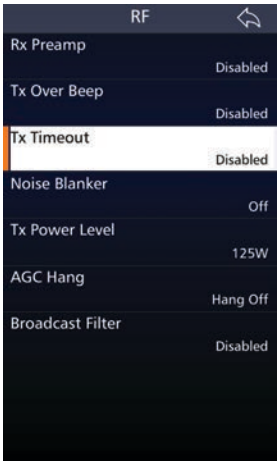

Rx Preamp

Enables or disables the RF pre-amplifier. The pre-amplifier provides an additional receiver gain of 5 dB. Generally, the RF pre-amplifier is switched off when an automatic mobile antenna is in use as these antennas have a built-in RF pre-amplifier.

Tx Over Beep

When this option is selected, the transceiver transmits a short tone after the PTT button is released. The tone provides an audible indication to the Operator at the remote station that the local station has stopped transmitting.

Tx Timeout

When this feature is enabled, the transceiver will stop transmitting if the PTT button is held on for more than the allowed time limit eg. if the handset is accidentally wedged under a seat. Releasing and pressing the PTT button will re-enable transmission.

Set the maximum transmit time to either one, two, or three minutes. Alternatively, this transmit timeout can be disabled.

Noise Blanker

This setting allows the predictive noise blanker to be switched on or off. The noise blanker is useful to reduce repetitive vehicle related electrical interference eg. noise from a windscreen wiper motor.

Note: The noise blanker will not be effective in situations where for example, external power line noise is blanketing the receiver.

Select either: Off or On.

Note: In certain situations noise blankers can cause intermodulation in receivers. In these cases the noise blanker should be disabled.

Tx Power Level

This section sets the global RF power output for all channels in the transceiver.

Select either: 10 W, 30 W, 125 W, or 150 W in SDS mode.

Select either: 10 W, 30 W in Manpack mode.

AGC Hang

Automatic Gain Control (AGC) Hang delays the AGC system's gain response after a signal level decreases to zero. This prevents receiver noise for the hang period.

Select either: Hang Off or Hang AGC.

Broadcast Filter

With the Broadcast Filter enabled, strong broadcast signals below 1.6 MHz will be filtered out.

Select either: Disabled or Enabled.

Scanning

Scanning allows the transceiver to monitor several channels for incoming calls. For example, a station calling a station that is in scanning mode can send a Beacon Call on any channel knowing the station it is calling is monitoring all its available channels. A response from the scanning station will only occur on channels that are open for communication. It is particularly useful as the nature of HF signal propagation means that not all channels are available for communications at one time.

Stations in scan can also monitor channels for voice activity or signals received that have signal strengths over a preset level.

The transceiver will come out of scanning mode for the following reasons:

- A Selcall is received.
- Signal Strength Level (SSL) mute is selected and a signal with a level greater than the pre-set threshold is received.
- Audio (syllabic) mute is selected and a voice signal is detected.

The **Scan icon** on the Home screen, once pressed, initiates scanning according to the currently selected scan table, see Scan Settings page 97. If no scan tables are available a “No Scan Channels” error will be shown.


Scan

Whilst scanning, several options on the screen are hidden (Channels, Hop and Tune) and the Scan icon is animated.

To stop scanning, press BACK or the scan icon.

Pressing the Scan icon for longer than 1 second will bring up 1 of 3 possible screens:

- The Scan Settings menu (see page 97) when ALE 2G or 3G are not enabled.
- A list of the available ALE 2G Preset Maps when ALE 2G is enabled (See Barrett ALE 2G and 3G User Guide (P/N BCM40524)).
- A list of the ALE 3G Pool entries (See Barrett ALE 2G and 3G User Guide (P/N BCM40524)).

Scan Settings

To display the Scan Settings, select **Scan** from the **Settings** Menu.

Tap **Scan** from the Settings screen to display the Scan screen.

A list of items that may be configured is displayed. To reveal more items, either swipe up on the touch screen or press .

Settings Scan

Scan Rate

This defines the rate of which the scanning should be performed.

Select the scan rate applicable to non-Selcall scan channels, either: 300, 500, 700, 1000, 1500, 2000, or 5000 ms.

Dwell Time

Select the length of time the transceiver dwells (waits) on a channel after scan has been stopped by signal strength level (if signal strength level mute is set) or voice activity (if audio mute is set).

Select between 1 and 10 seconds.

Resume Time

Set the time period after which the transceiver will automatically resume scanning from the last operation eg. after a key press or PTT.

Select either: Off, 1, 2, 3, 5, 10, 15, 20, or 30 minutes.

Scan Table

Select the Scan Table to be used when the transceiver is put into scan mode, or if enabled, when scan resume occurs.

There can be up to eight Scan Tables with 30 channels in each.

Note: When scrolling through the Scan Tables to make a selection, only Scan Tables with channels entered will display. If none of the Scan tables have any channel entries, the message "All Scan Tables Empty" displays.

Tap **Table Selection** from the Scan screen to display the Table Selection screen.

To reveal more items, either swipe up on the touch screen or press  .

Each entry shows the name of the table and the respective number of channels.

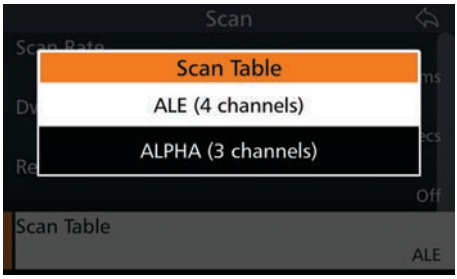

Scan Tables

Note: All channels are displayed in numerical order within the scan table with respect to the entry number. There are a maximum of 30 entries in each table.

Tap **Edit Scan Tables** from the Scan screen to display the Selcall Scan Tables screen.

The example shows two scan tables which may be edited. Each table reveals the name of the table, the antenna, the number of channels in the table and the channel numbers.

Add a Scan Table

To add a Scan Table, tap  from Scan Settings < Edit Scan Tables.

Scan Table Name

This is the name of the scan table. Without setting this, the name will default to “TABLE”.

Scan Table Channels

Tap the checkboxes adjacent to the channels you wish to choose and then tap  .

After configuring the above items, tap  to add the table.

A confirmation message displays.

Tap **Yes**.

Delete a Scan Table

Select the table to be deleted, then tap and hold for three seconds.

A confirmation message displays.

Tap **Yes**.

Secure Display Mode

This mode stops the channel frequency being shown on the front panel. Channel frequencies are uneditable, as are labels. The pack and diagnostic information becomes irretrievable and cannot be exported.

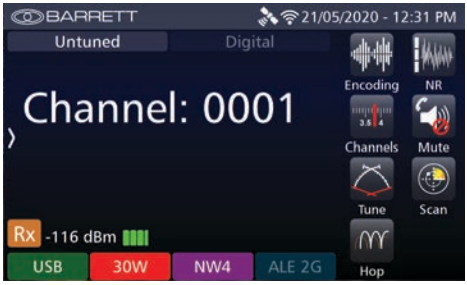

This mode can only be enabled using the Barrett Communications 4000 Series Programming Software.

Security Settings

This section is used to configure the security settings for the transceiver.

Tap **Security** from the **Settings** menu to access the Security menu.

A list of items that may be configured is displayed.

The current status of each of the items is displayed to the right.

This menu is dependant on the Options installed in a transceiver.

Settings → Security

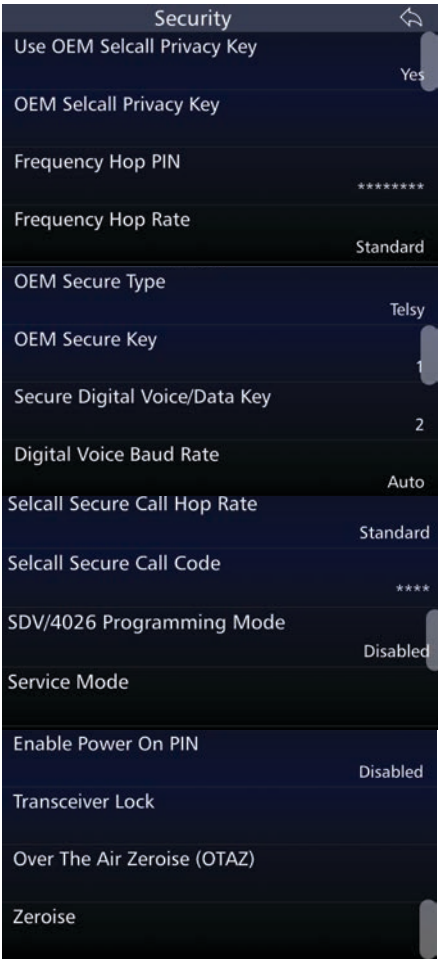

Use OEM Selcall Privacy Key

This setting indicates whether the OEM Selcall Privacy Key is active.

OEM Selcall Privacy Key

Turning this on allows data type Selcalls (Pagecall, GPS, Status, Telcall) on OEM channels to be encrypted with DES-56 encryption.

See page 31 for more information on OEM Selcall.

Frequency Hop PIN

The Hopping PIN (if the Frequency Hopping Option is enabled on the transceiver) is 8 digits long and is usually provided by a network administrator. The Hopping PIN determines the Hop bandwidth. For instance:

Hopping PINs 00000000 to 19999999 are used for hopping ± 2 kHz

Hopping PINs 20000000 to 49999999 are used for hopping ± 16 kHz

Hopping PINs 50000000 to 99999999 are used for hopping ± 128 kHz

Hopping up to ± 2 kHz is useful for narrow band antennas in situations such as antenna tuners in manpack operation.

Hopping up to ± 128 kHz can be used with wideband antennas such as base station broadband antennas.

Please note that all transceivers that wish to communicate via Hopping need to have the same Hopping PIN and frequency hop rate configured.

Note that once entered, the PIN can never be retrieved or viewed for security reasons.

Frequency Hop Rate

The Frequency Hop Rate changes the number of hops per second used by the encrypting algorithm.

Select either Standard (5 hops per second) or High (25 hops per second).

OEM Secure Type

This displays whether a scrambler has been installed and the name of the scrambler.

OEM Secure Key

If keys are installed, keys can be selected from this menu.

Secure Digital Voice/Data Key

The Secure Digital Voice and Data Key is used for secure digital voice and 3G Data calls. Keys need to be entered into the transceiver's SDV module using the Barrett Communications Key Management Software.

Select between 1 and 255.

All transceivers in the network must have the same key number in order to communicate.

For more information, consult the Digital Voice manual (P/N BCM40504).

Digital Voice Baud Rate

The Digital Voice Baud Rate setting fixes the baud rate at 600/700bps, 1200bps, 2400bps or Auto. Setting this rate to Auto will allow the transceiver to automatically adjust the baud rate.

Selcall Secure Call Hop Rate

The Selcall Secure Call Hop Rate is the rate at which the secure call hopping moves between transmission frequencies. Unlike frequency hopping, it doesn't utilise GPS.

Select either Standard (4 hops per second) or High (15 hops per second).

Selcall Secure Call Code

Enter a four-digit number. Both the transmitting and receiving stations must have the same code.

SDV/4026 Programming Mode

If the transceiver is fitted with an SDV module, this option enables the SDV to be programmed.

Select either Disabled or Enabled.

When enabled, the functionality of the transceiver is disabled. After programming the SDV, reboot the transceiver.

For more information, consult the Digital Voice manual (P/N BCM40504).

Service Mode

A mode for use when servicing a transceiver. Only accessible by PIN.

Enable Power On PIN

Selecting this menu option allows a user to manually change whether the transceiver asks for a password upon start-up. This password is set using the Barrett 4000 Series Programming Software.

Transceiver Lock

The Transceiver Lock function locks a remote transceiver via Selcall and uses the remote transceiver's pre-set Transceiver Lock/OTAZ PIN. This function does not remove any settings and can be reversed by entering the Transceiver Lock/OTAZ PIN on the front panel of the transceiver.

Over the Air Zeroise (OTAZ)

OTAZ will clear the following information from a remote transceiver via a Selcall and the entry of the Transceiver Lock/OTAZ PIN for that station:

- all channel information
- all Options
- all ALE 2G and 3G information
- ALL security PINs apart from the Transceiver Lock/OTAZ PIN
- encryption keys

Zeroise

Zeroise will clear the following information from the local transceiver:

- all channel information
- all Options
- all ALE 2G and 3G information
- ALL security PINs apart from the Transceiver Lock/OTAZ PIN
- encryption keys

Remote Access Password

This allows a user to set a password used when accessing the transceiver remotely via serial or network connections e.g. when using the Barrett Remote Control App, the Desktop console or programming via PC.

Stealth Mode

Stealth mode operates as a quiet or silent mode of operation. When active, all transceiver noises are muted, key lights are disabled and the backlight is set to the lowest setting.

To enable stealth mode, tap the icon in the swipe menu.

When active, the icon will be green.

Pressing PTT while stealth mode is active will temporarily deactivate stealth mode, reinstating lights and audio.

Stealth mode will re-activate after 30 seconds of inactivity.

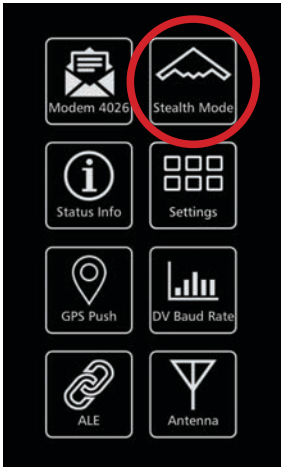

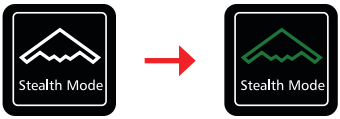

Off On

Theme Schedule

The Theme Schedule allows the automatic transition between display themes. This change of themes can be of use for changing, for instance, between a daytime theme and a night-time theme.

To set a theme schedule, select an alternate theme, the time when the theme will switch on and when it will switch off.

Finally, enable the Theme Schedule by changing the Theme Schedule Status to Enabled.

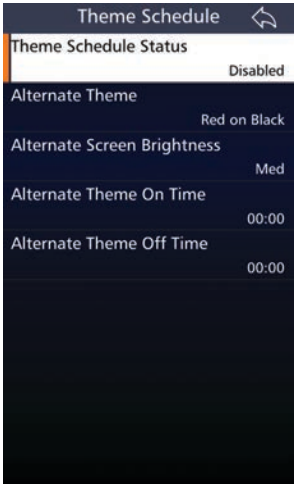

Default | Black on Green | Green on Black | Red on Black

Tuning

When tuning, the transceiver will transmit, at the power level selected, a carrier on the channel selected, at 1.6 kHz above the Suppressed Carrier Frequency (SCF) (displayed frequency) of that channel.

Tune

Tuning occurs automatically when PTT occurs if the appropriate antenna tuner type has been selected. Tuning can also be activated by pressing and holding the tune icon on the handset.

The keypad will illuminate red whilst the transceiver is tuning.

When the tune process is completed the display will show "Tune Ok", or "Tune Failed" in the top left-hand corner.

The VSWR briefly displays below the frequency indicating the efficiency of the selected antenna.

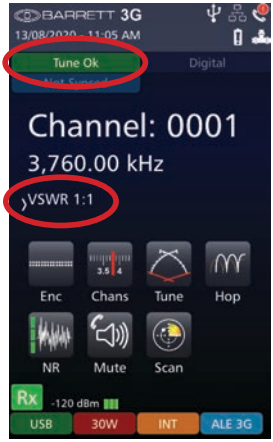

Zeroise

A Zerosie of the transceiver can be performed in two ways:

- A fast emergency zeroise can be performed by pulling and turning the on/off switch to the Z position. A ten second countdown will begin and a zeroise will be performed when zero (0) is reached.
- From the Settings < Security Menu, select Zeroise. The countdown will then begin.

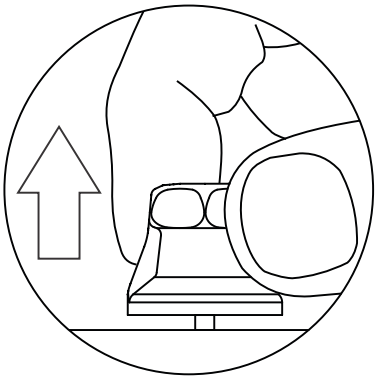

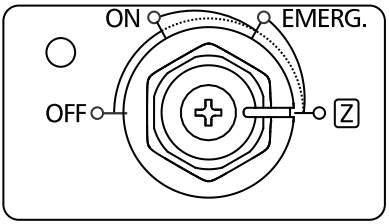

Zeroise will clear the following information from the local transceiver:

- all channel information
- all Options
- all ALE 2G and 3G information
- ALL security PINs apart from the Transceiver Lock/OTAZ PIN
- encryption keys

OR

Settings → Security

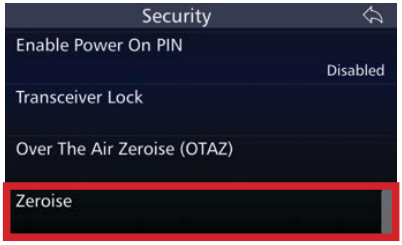

INSTALLATION 7

This chapter contains the following sections:

- Introduction
- Mobile Installations
- Base Station Installations
- Marine installations

Introduction

This section provides instructions for the installation of land based HF communication equipment. Most of the installation work can be performed by non-technical personnel if they carefully follow the instructions given in this manual. However, it is recommended that the completed installation be checked by a suitably qualified technician. In some equipment configurations, technical adjustment is required for the equipment to operate correctly.

Note: Some equipment has specific instructions supplied with it. Those instructions over-ride the general guidance of this manual, and must be followed in detail.

This chapter begins with connecting a secondary head to the rear of the transceiver and then outlines the most common configurations beginning with man-pack installations, followed by mobile, base station and marine installations. Please read this chapter carefully when considering the best antenna set-up for your situation.

For further information on these installations, please consult the guide provided with your antenna or contact your Barrett dealer.

Please note: When unpacking your order, check the contents against the packing notes provided. Before discarding the cartons, check that all accessories have been removed and are not mislaid in the packing material. Inspect the equipment for any transit damage. If damage has occurred, notify your supplier immediately. Failure to do this could affect the warranty covering the equipment.

Installing a Secondary Control Handset

The PRC-4090 can support a secondary control handset when paired with a PRC-4090 System Docking Station. This secondary handset can be purchased on its own from Barrett Communications and controls the transceiver in the same manner as the primary. This may be useful in multiple situations such as for security reasons, a secondary head may need to be located in another room; personnel carriers may require a head be accessible for those in the back of the vehicle; or marine installations where a secondary head may need to be away from the primary body.

Ensure the transceiver is switched off before connecting secondary control handset.

Note: If only the secondary control handset is connected then the Ethernet functionality of the SDS will not work.

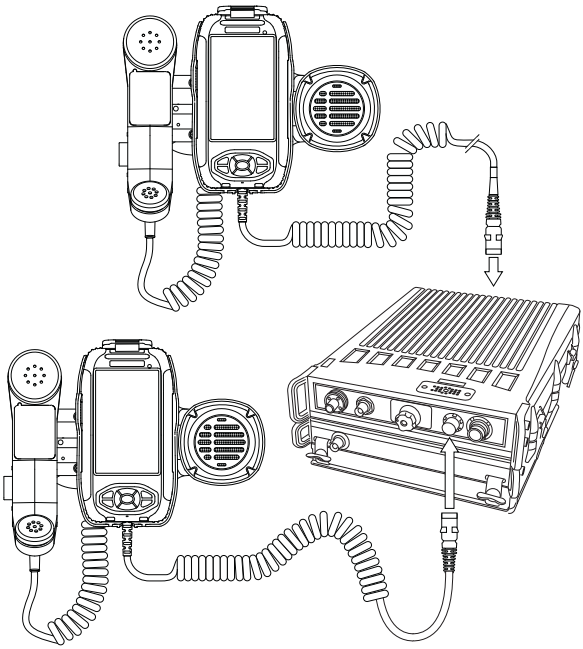

Manpack Installations

When combined with a battery pack, the PRC-4090 easily adapts to suit manpack configurations. The Control Handset can be easily mounted to molle or webbing with a molle attachment.

Control Handset Mounting

The PRC-4090 Control Handset can easily be mounted to webbing or molle using the PRC-4090 Molle Attachment (P/N 4090-05-02).

The transceiver can be stored screen facing outwards or reversed so that the screen is protected.

The Molle Attachment can also be used to attach to solid surfaces.

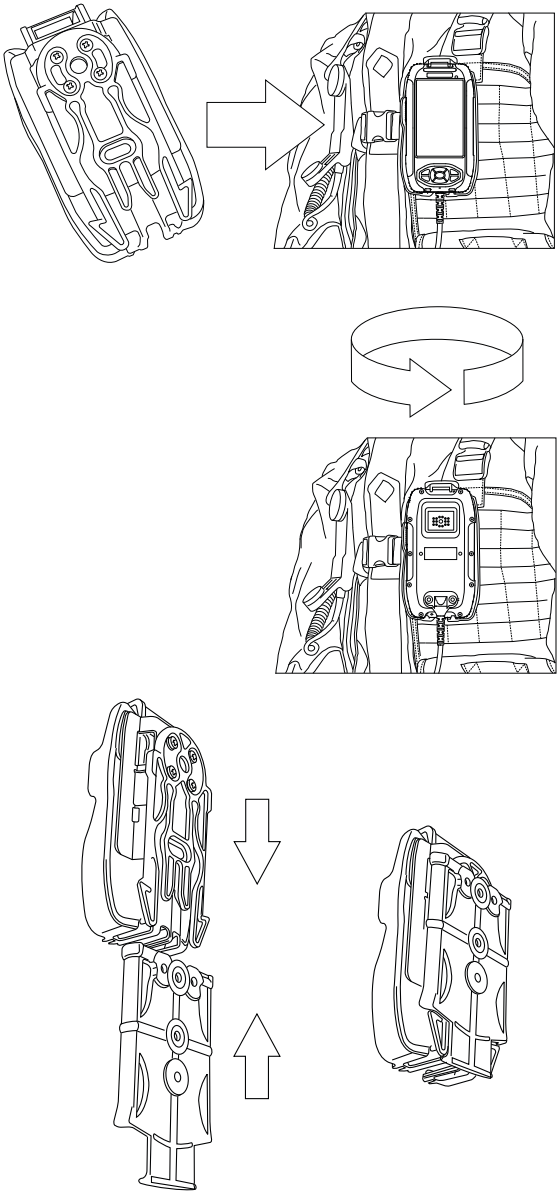

Battery Pack

The Barrett PRC-4090 Transceiver can be powered in multiple ways. For manpack use, it has been designed to use the Barrett PRC-4090 16Ah Battery pack or external military battery. The PRC-4090 Battery Pack has an in-built charger/ battery management system. This battery pack can be charged in multiple ways as outlined over the following pages.

With the battery pack fitted, the transceiver can be operated and the battery pack charged simultaneously when a DC input of between 10 V DC and 70 V DC is supplied to the unit.

Additionally, the PRC-4090 battery pack can be charged connected or disconnected to the manpack using the AC/DC input universal power adaptor unit or directly from a 12 or 24 V tactical solar panel (MPPT charger fitted for optimised current input), or BB series military battery configured as shown in the following diagrams.

AC/DC Input Universal Power Adaptor Unit P/N 2090-03-01

For operation from a mains voltage between 100-254 V AC sources:

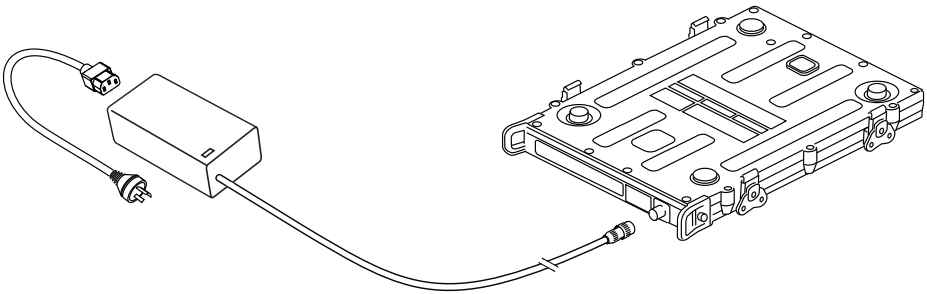

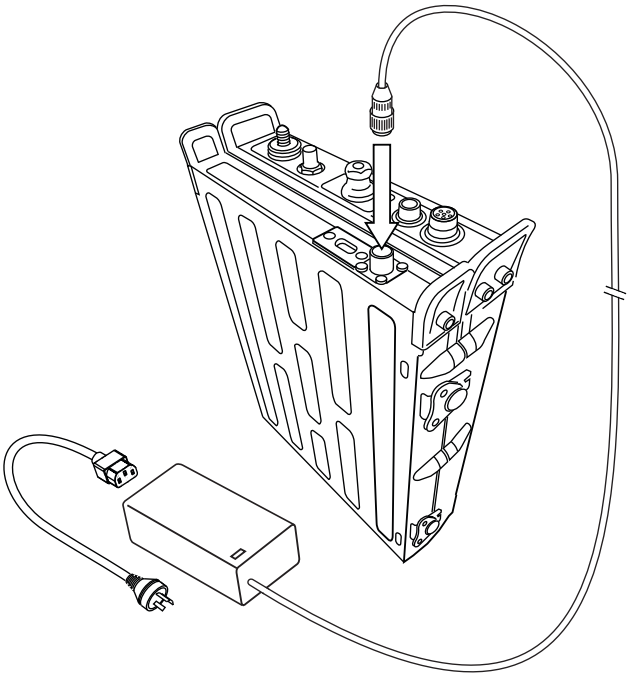

Tactical Solar Panel P/N 2090-03-02 or 03

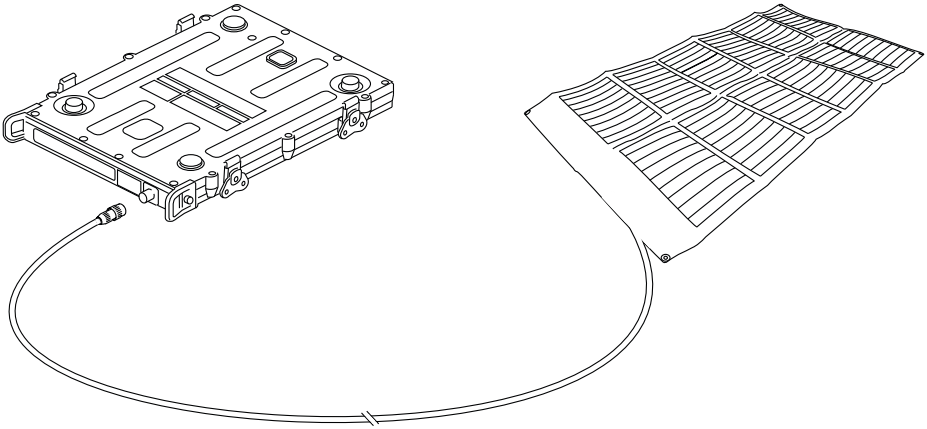

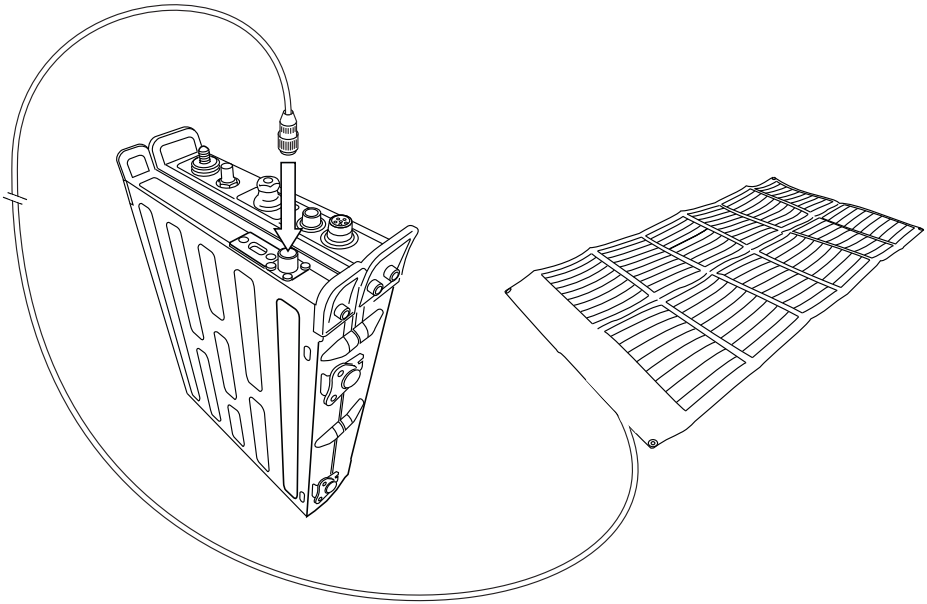

Military battery

The PRC-4090 can interface with off-the-shelf Military standard batteries such as BB series batteries. To interface with such batteries, the adaptor and interface cable are required.

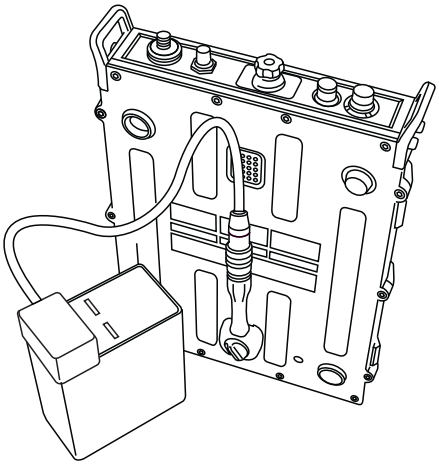

Battery Charge Indicator of the 4090

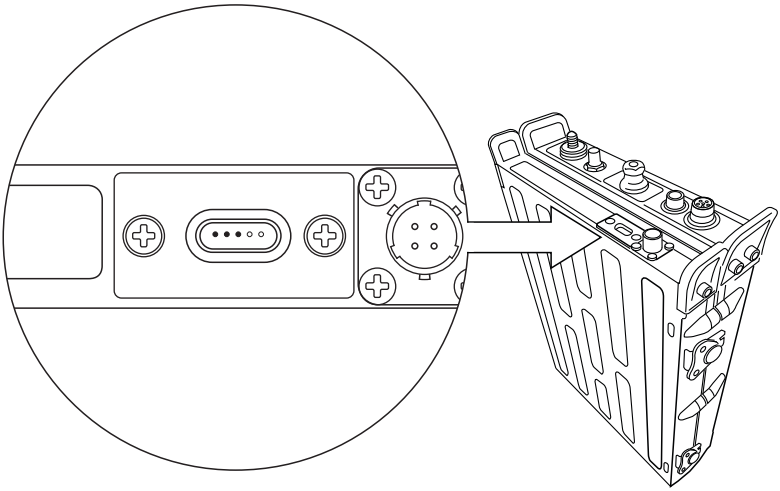

The e-ink display of the PRC-4090 Battery Pack displays five dots indicating battery charge levels:

	Zero dots	<5%
●	Solid 1 black dots	5%-20%
● ●	Solid 2 black dots	20%-40%
● ● ●	Solid 3 black dots	40%-60%
● ● ● ●	Solid 4 black dots	60%-80%
● ● ● ● ●	Solid 5 black dots	80%-100%

When charging the PRC-4090 Battery Pack, the LED indication will animate.

Regular charging (24V charger): a blinking dot indicates the capacity of the battery i.e if the battery is at 25% charge, the second dot will blink while the first will remain solid.

Fast Charging (48V charger): the dots will animate sequentially from the appropriate charge level of the battery i.e if the battery is at 25% charge, the first two dots will remain solid while the last three dots will animate sequentially.

The Control Handset display will also indicate the speed of the charge with the following icons:

Regular charge (24V charger)

Fast charge (48V charger)

Tactical Antenna Options

The PRC-4090 manpack can be used with the 10 metre throw over long-wire provided or the optional 3 metre collapsible whip.

Note: Either the whip or the long-wire can be used but not both together.

Collapsible Whip Antenna (P/N 4090-02-07)

The gooseneck is fitted to the whip antenna stud and the whip to the goosneck by bayonet fitting. The whip antenna should then be unfolded to its maximum height. If using the Barrett manpack while walking in the backpack configuration it is suggested that while in receive standby mode the collapsible antenna be only extended to half height and secured using the Velcro tab. When a call is received extend the antenna to full height before transmission.

When using an un-tuned antenna such as the whip or the long-wire the selection "Antenna Type" (see page 24) in the standard menu should be used to enable the automatic tuner i.e. select "Whip/Long-wire" operation. When this is selected the in-built tuner automatically tunes the whip or long-wire whenever the unit transmits after a channel change.

Note: Do not use the whip antenna near metallic structures. This can produce high voltages within tuner and may cause damage.

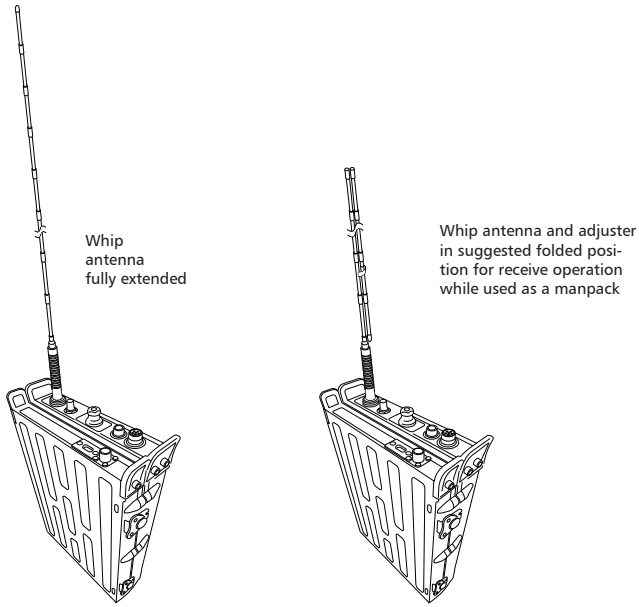

Throw Over Long-wire Antenna (P/N 4090-02-06)

The long-wire antenna should be unfurled and the end away from the man-pack Transceiver should be attached to any structure available and as high as possible.

When using an un-tuned antenna such as the whip or the long-wire the selection “Antenna Type” (see page 24) in the standard menu should be used to enable the automatic tuner i.e. select “Whip/Long-wire” operation. When this is selected the in-built tuner automatically tunes the whip or long-wire whenever the unit transmits after a channel change.

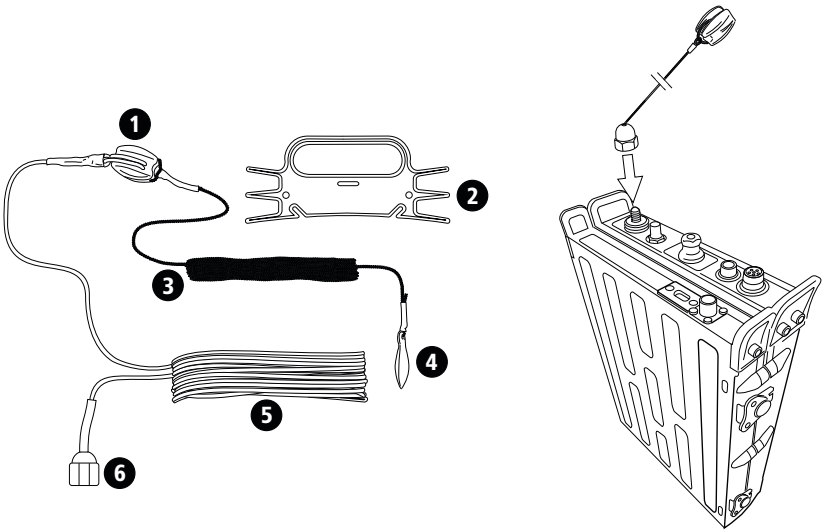

1	Balun
2	Spool
3	Cord
4	Weight
5	Antenna
6	Coaxial connector

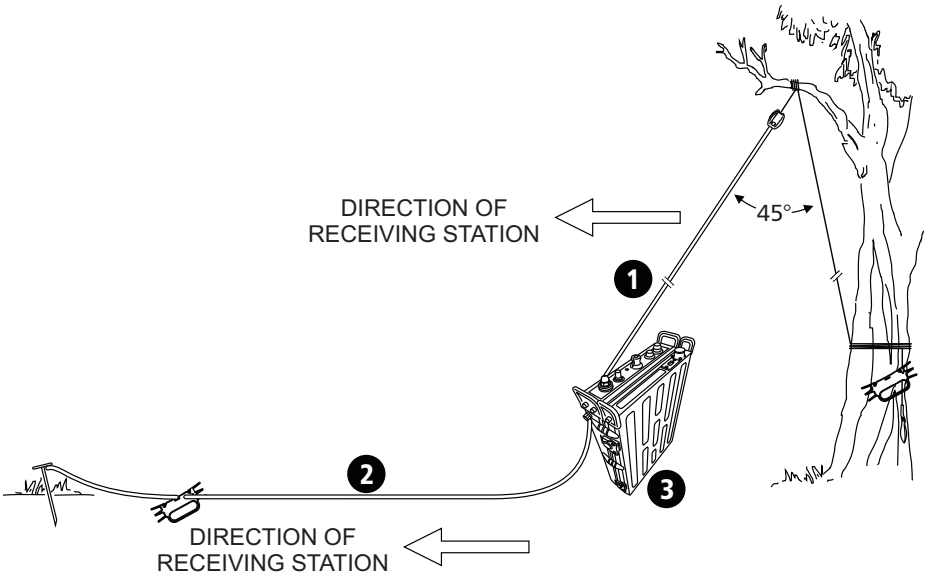

1. Antenna
2. Earth (ground)
3. PRC-4090 Transceiver (P/N 4090-00-01)

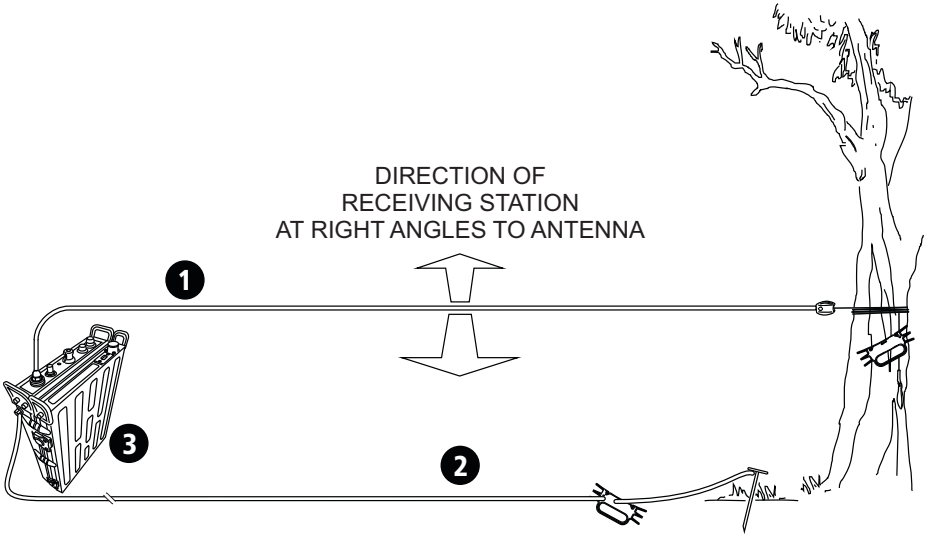

1. Antenna
2. Earth (ground)
3. PRC-4090 Transceiver (P/N 4090-00-01)

Single-wire Counterpoise (P/N 4090-02-09)

When using either a whip or the long-wire antenna use of the counterpoise supplied is recommended for better efficiency. This is connected to the PRC-4090 via the ground post.

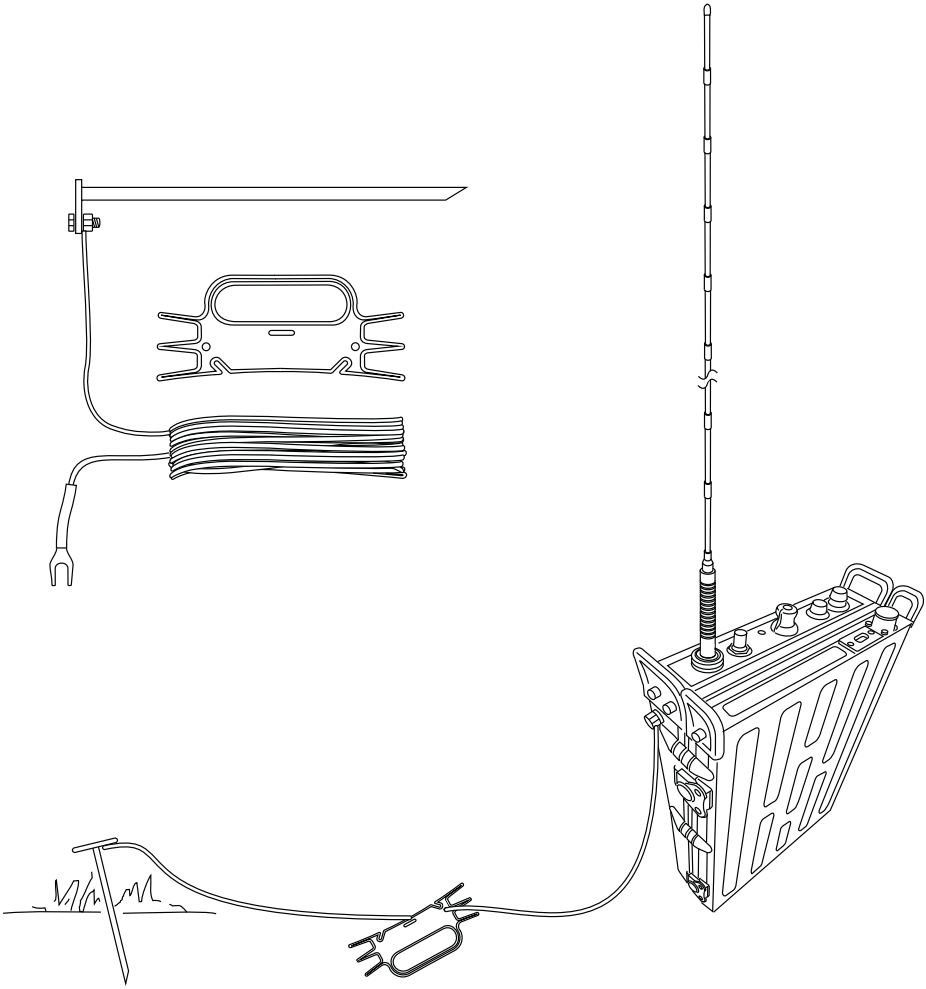

Tactical Broadband Dipole Antenna (2090-02-03)

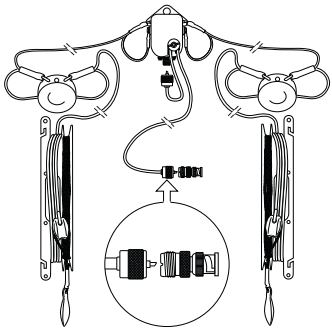

The Tactical Broadband Dipole Antenna is a dipole antenna with loading to allow broadband operation. For operation, each side of the antenna is unwound to its full length. Throwing cords are provided that can be used to elevate the antenna or tie it to ground for an inverted V configuration. The antenna will handle continuous data and CW transmission with a Barrett 30 W manpack transceiver. Only low duty cycle voice operation is supported for operation with 100 W transmitters. The antenna can be used in a number of configurations, depending on structures available for elevation.

Tactical Broadband Dipole Antenna Configurations

Horizontal Dipole

The horizontal dipole has maximum gain on the broadsides of the antenna and reduced gain along the axis. Height above ground affects radiation angle. Lower heights give higher angle radiation, better for NVIS (short distance). Higher heights give lower radiation angle, better for long distance communication.

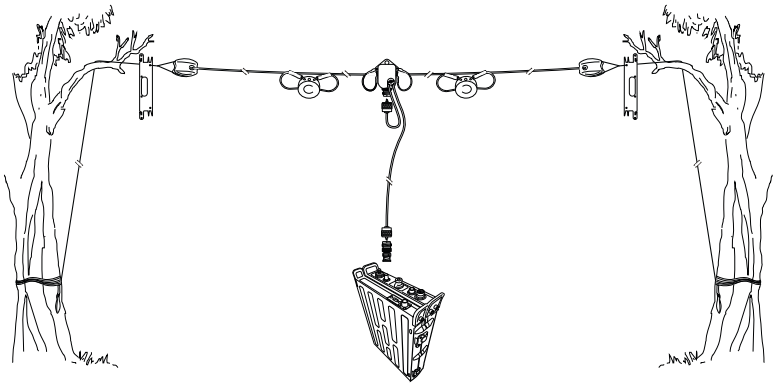

Inverted V

The inverted-V has a more omni-directional pattern than the Horizontal Dipole, with lower maximum gain. The ends of the antenna should be at least 0.5 m above ground. Suitable mainly for NVIS and medium distance.

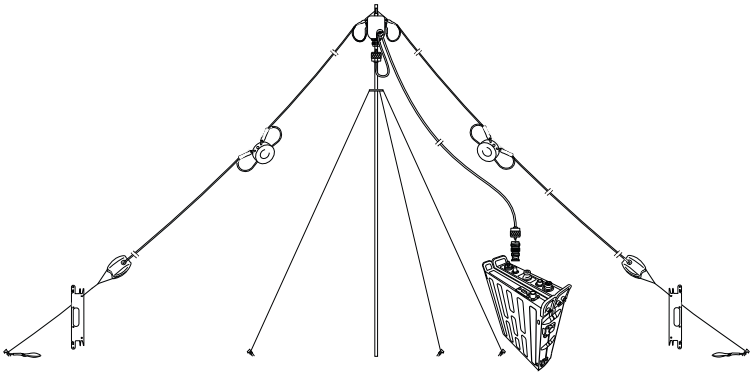

Sloping Dipole

Radiation with the Sloping Dipole becomes more directional, with increased gain in the direction of the lower end of the antenna, and reduced gain towards the higher end.

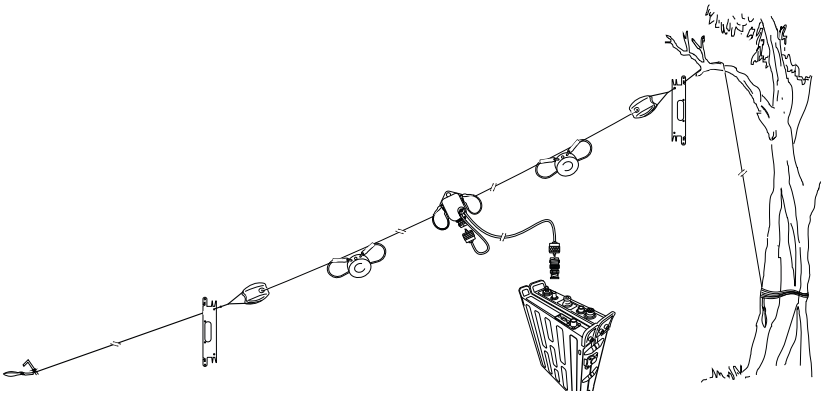

Inverted U

The inverted U has a radiation pattern between that of horizontal dipole and inverted V. For optimum performance, the radiating elements should be fully unwound, and should not touch the ground. Suitable for NVIS to medium distance. Longer distance performance will be enhanced by erecting the antenna at a height of 10 m or more.

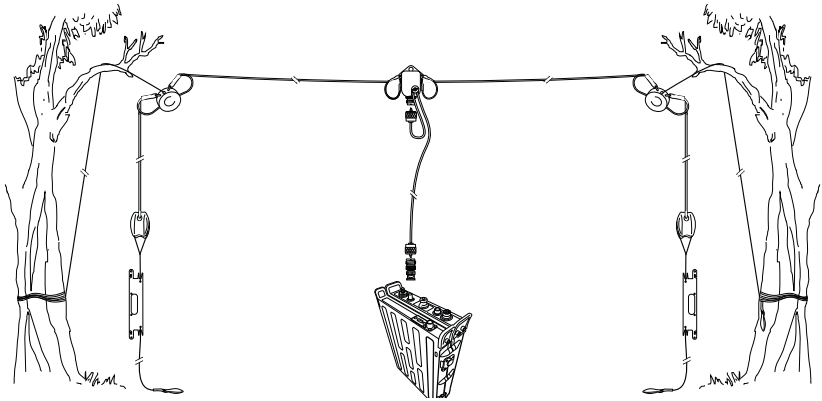

Tactical Tuned Wire Dipole Antenna (2090-02-01)

The Tactical Tuned Dipole Antenna is a tuned antenna with frequency labels to indicate tuned lengths. For operation, each side of the antenna is unwound to the tuned length for the frequency required. For operation at a labelled frequency, the label should be level with the end of the winder as shown in the picture below. Lengths for intermediate frequencies should be estimated and tied off appropriately. The remaining wire remains on the winder. The throwing cord can then be used to elevate the antenna. The antenna will handle 100 W continuous data and CW transmission. The antenna can be used in a number of configurations, depending on structures available for elevation.

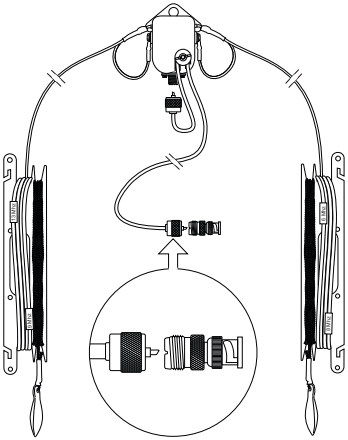

Tactical Tuned Wire Dipole Antenna Configurations

Horizontal Dipole

The horizontal dipole has maximum gain on the broadsides of the antenna, and reduced gain along the axis. Height above ground affects radiation angle. Lower heights give higher angle radiation, better for NVIS (short distance). Higher heights give lower radiation angle, better for long distance communication.

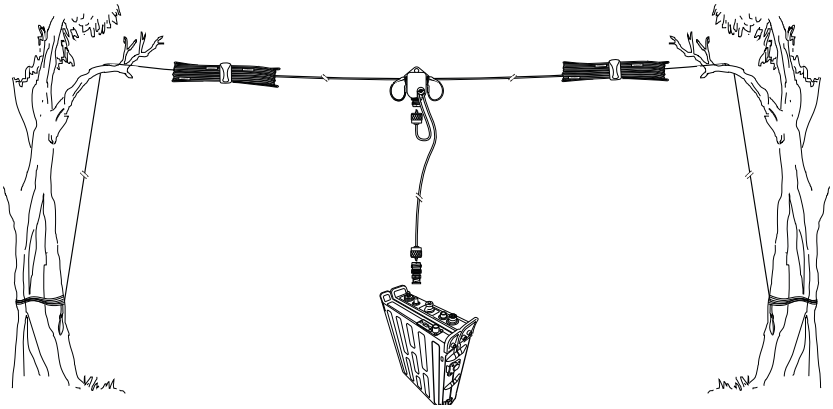

Inverted V

The inverted-V has a more omni-directional pattern than the Horizontal Dipole, with lower maximum gain. The ends of the antenna should be at least 1 m above ground. Suitable mainly for NVIS and medium distance.

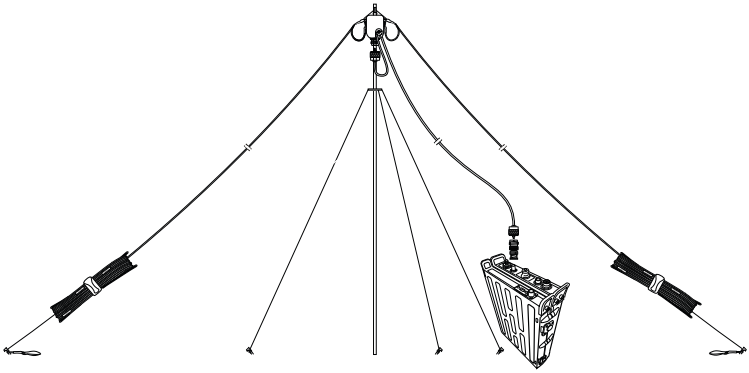

Sloping Dipole

Radiation with the Sloping Dipole becomes somewhat asymmetrical, with increased gain in the direction of the lower end of the antenna, and reduced gain towards the higher end.

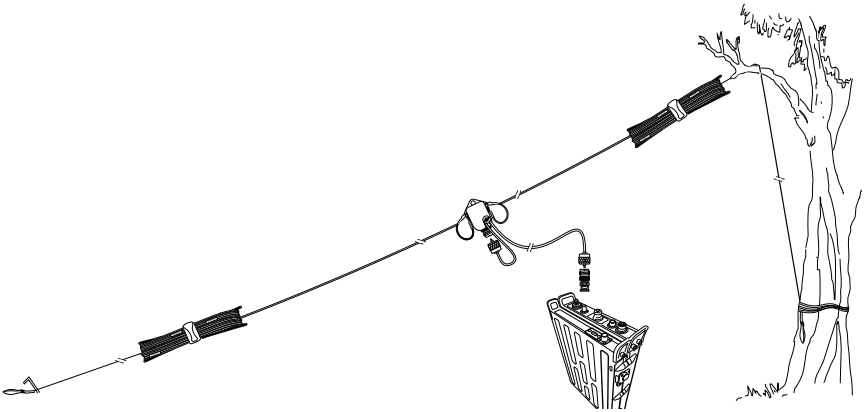

Single Ended

For rapid deployment, with reduced but still acceptable efficiency, the antenna can be operated single ended. In this configuration, one side of the antenna (labelled “antenna”) is unwound to the desired frequency and tied to an elevated structure. The central balun should be located close to the ground, and the remaining side of the antenna (“earth”) partly unwound (5 to 10 m) and stretched out on the ground below the radiating element.

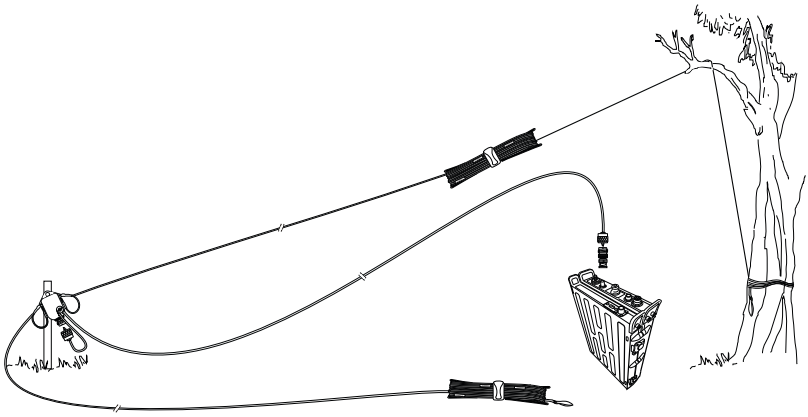

Mobile Installations

When combined with a PRC-4090 System Docking Station and Anti-vibration Plate, the PRC-4090 is easily adapted to suit mobile installations. While in this configuration, the PRC-4090 retains its ability to interface with the full range of Barrett peripherals including the 2019 Automatic Tuning Mobile HF Antenna and Barrett Linear Amplifiers.

PRC-4090 System Docking Station – Rear

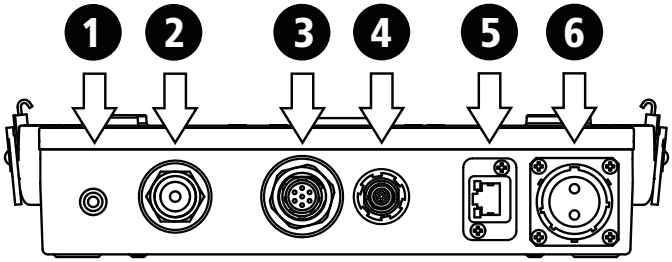

1	Earth stud
2	Coaxial connector
3	ATU connector
4	PRC-4090 Handset connector
5	Ethernet
6	DC Power In

Assembly

1. Place the SDS on top of the Anti-Vibration Plate, ensuring that the feet and capstans are correctly aligned and drop into the keyway slots.

2. Push the SDS towards the rear of the anti-vibration plate, as shown below, so that the capstans and SDS click into place.

3. To secure the SDS, first ensure that the lock clamps are connected to the slots on the front of the SDS, then turn the fasteners a quarter turn.

SDS Feet Configurations

The feet attached to the bottom of the SDS can be configured to suit the anti-vibration plate and the PRC-4022 Power Supply. The below images show the appropriate feet positions for each configuration.

SDS to fit Anti-Vibration Plate:

SDS to fit PRC-4022:

Handset Docking Station Configurations

The Handset Docking Station can be configured for either portrait or landscape use of the Control Handset. The exploded diagrams below show each of these configurations.

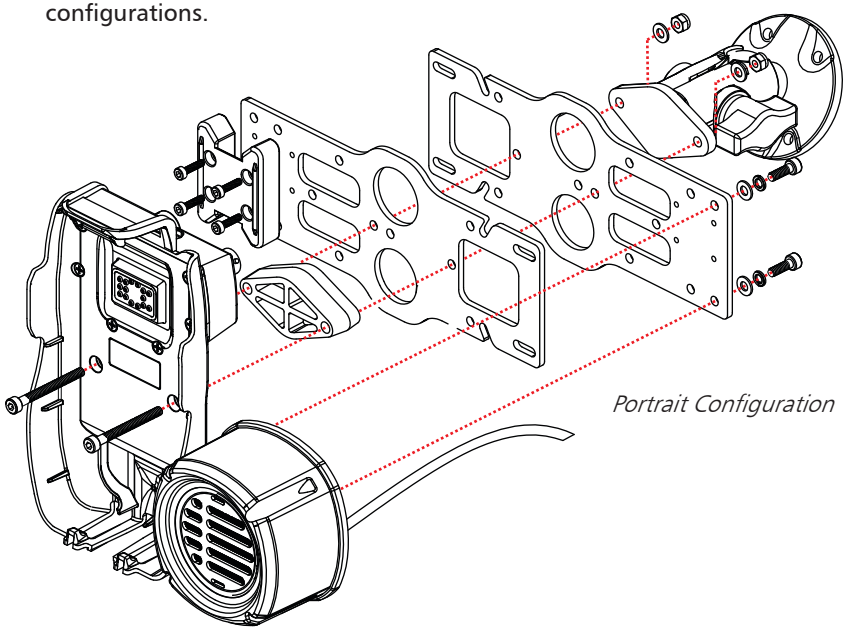

Portrait Configuration

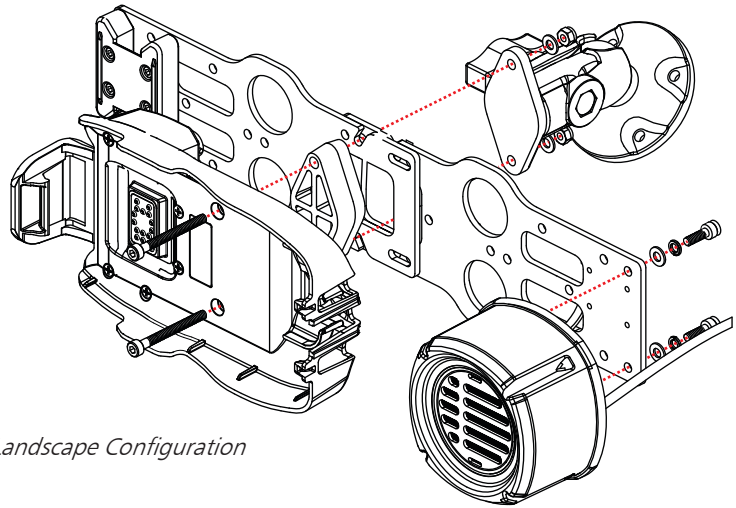

Landscape Configuration

Complete Mobile Assembly

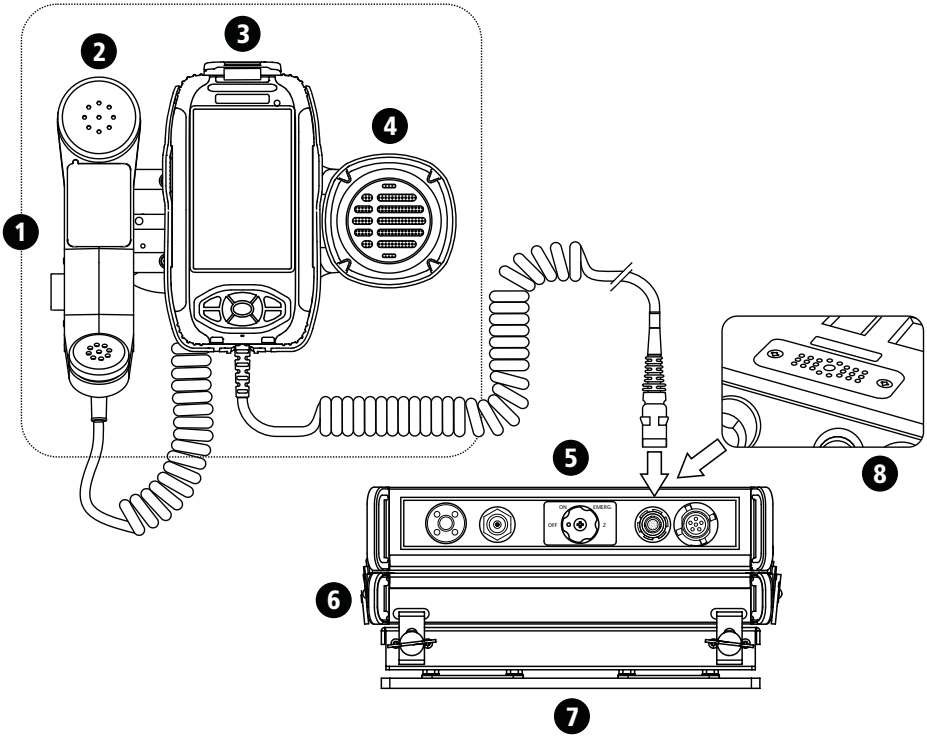

1	PRC-4090 Control Handset (P/N 4090-01-09) and Control Handset Docking Station (P/N 4090-05-03)
2	H250 Tactical Handset (P/N 4090-01-14)
3	PRC-4090 Handset Cradle (P/N 4090-05-01)
4	Ext. Speaker (P/N 4090-01-33)
5	PRC-4090 HF SDR Transceiver (P/N 4090-00-01)
6	PRC-4090 System Docking Station (P/N 4090-05-00)
7	PRC-4090 Anti-Vibration Mounting Plate (P/N 4090-05-07)
8	Hotshoe Accessory connector

Transceiver Mounting

The following points must be considered when mounting the transceiver.

Safety

It is essential that the transceiver be mounted in a place where it cannot cause injury to the occupants of the vehicle in the event of a motor vehicle accident. For this reason overhead mounting is not generally recommended and “under dash” mounting must take into account the possibility of injuring the legs of front seat occupants.

Convenience

The chosen position for the transceiver or control handset, (if in mobile configuration) should be one which allows convenient operation.

Positions which are often used are:

On the centre console

In place of the glove box

Behind the seat

Under the seat

Under the dash board (if safe).

Where in mobile configuration, only the control handset need be mounted convenient to the operator. The transceiver may be mounted under a seat, in the luggage compartment or any other appropriate place within the vehicle (which allows for sufficient air flow).

All equipment should be positioned in such a way that convenient access for maintenance is provided.

Strength

It must be assumed that the vehicle will be used on rough roads and in many cases off road. Hence, the mounting of equipment must take into account the severe vibration and shock that may be encountered.

Transceivers may only be mounted to structural components of the vehicle body and not on interior panels. In some cases, the area around the transceiver mounting may need reinforcement.

Precautions should be taken to ensure fixing screws etc. cannot vibrate loose.

Air Circulation

The PRC-4090 relies on air flow around cooling fins to dissipate heat generated by the transmitter. The mounting position must allow free airflow around these fins.

Obstruction

The installation of a transceiver into a vehicle should not inhibit the normal use of the vehicle. Before selecting equipment positions, check that normal operation of steering, foot pedals, gear change, hand brake etc. are not impeded, and that heater or air-conditioning outlets, glove box and doors are not obstructed. Always check that the drilling of mounting screw holes will not damage electrical wiring, heater hoses or hydraulic lines.

Power Wiring

Connect the red positive and black negative wires from the transceiver power cable to the positive and negative terminal of the battery. Do not connect to the ignition switch or internal fuse panels as vehicle wiring to these points is of insufficient current capacity, causing voltage drop, possible noise interference and damage to cables through overheating. To prevent this, consider the following:

- Route the power cable away from high tension ignition wiring.
- Secure the power cable, either to other wiring or the vehicle body, with suitable cable ties.
- Where wiring passes through bulkheads, provide appropriate protection to prevent insulation being damaged.
- If an isolation switch is fitted between the battery's negative terminal and the vehicle chassis then it is important to connect the radio's negative supply cable to the chassis side of the isolation switch.

Grounding

Ideally the transceiver should be mounted as close as possible to the antenna with a common grounding (earth) point being used for both the antenna's ground (earth) connection and the transceiver's ground (earth) connection. See page 142, page 145, page 144 and page 180 for additional information regarding appropriate antenna grounding (earthing).

Antenna Mounting

The antenna mounting must provide a strong secure anchorage for the base of the antenna. To obtain maximum radiation, the antenna base must be well bonded electrically to the vehicle chassis. Paint, dirt, rust, etc. should be removed from the respective fixing points. The mounting point must provide a low resistance electrical path to the main vehicle metallic structure.

Due of the need to reduce the size of HF antennas so that they can be fitted to a vehicle, mobile antenna bandwidth becomes quite narrow and hence tuning is critical. In most cases the only tuning adjustment that can be affected is adjustment to position. Particular attention must be given to the antenna position if satisfactory performance is to be obtained. Refer to the instructions supplied with the antenna you have selected.

Antenna Feed Cables

Antenna feed cables should be run (as far as possible) away from other vehicle wiring and especially away from ignition high tension wiring. Where passing through body panels or internal bulkheads, grommets must be used to protect the cables. Water-proof connectors must be used when they are outside the vehicle.

Voltage Standing Wave Ratio (VSWR)

After installation it is recommended that the VSWR of the antenna should be measured for each channel. The instructions supplied with each antenna will detail this operation.

Noise Suppression

Noise generated by motor or electrical accessories on the vehicle may cause objectionable interference to the received signal. This noise enters the receiver either by means of the battery leads or the antenna system. Providing that the recommendations concerning battery wiring given earlier in this manual are followed, noise injected via the battery lead is unlikely to be significant. Most noise problems result from pick-up by the antenna. Practical cures involve either preventing the noise from being generated or minimising it from being radiated by the wiring connected to the noise source.

Please note that some newer fuel injected engines emit very strong EMI (Electromagnetic interference) noise levels across the HF radio band, which is near impossible to suppress. For these installations, moving the position of the antenna to another position on the vehicle may reduce the noise effect but full elimination of noise during engine running may never be achieved. Please note that this is not unique to the Barrett PRC-4090 transceiver as all transceiver makes will suffer similarly from the effects of this noise under these conditions.

General Noise Suppression Tips

When searching for sources of noise, some of their characteristics can be helpful in identification:

- Petrol engine ignition noise and contact breaker noise is a sharp staccato ‘plop’ varying with engine speed. It is only with this class of noise that the impulse noise limiter incorporated within some transceivers is effective.
- Noise from other sources generally has a more ‘mushy’ sound. That from the alternator/generator may only be troublesome over a limited range of engine speed and can also be influenced by the state of charge of the battery.
- The noise from instrument regulators may depend on the battery voltage, the reading of the instrument and the length of time the system has been switched on. For this reason, the search for noise sources must be done thoroughly to prevent noise from apparently reappearing after the installation has been completed.
- Electric motors generate a ‘whining’ sound. Do not forget to check windscreen wipers, electric fuel pumps, heater and air conditioning fans and other motors which operate only on an intermittent basis.

2019 Automatic Tuning Mobile HF Antenna

(Barrett P/N BC201900)

The Barrett 2019 automatic tuning mobile HF antenna plugs directly into the rear of a PRC-4090 System Docking Station using the cables supplied. Optional PRC-4090 Control Handset Extender Cable - 6.0 metres (4090-01-13)

Important: PRC-4090 transceivers must have the 2019 antenna option set during programming.

Connection Details for a PRC-4090 Transceiver with Mobile Pack and 2019 Automatic Tuning Mobile HF Antenna

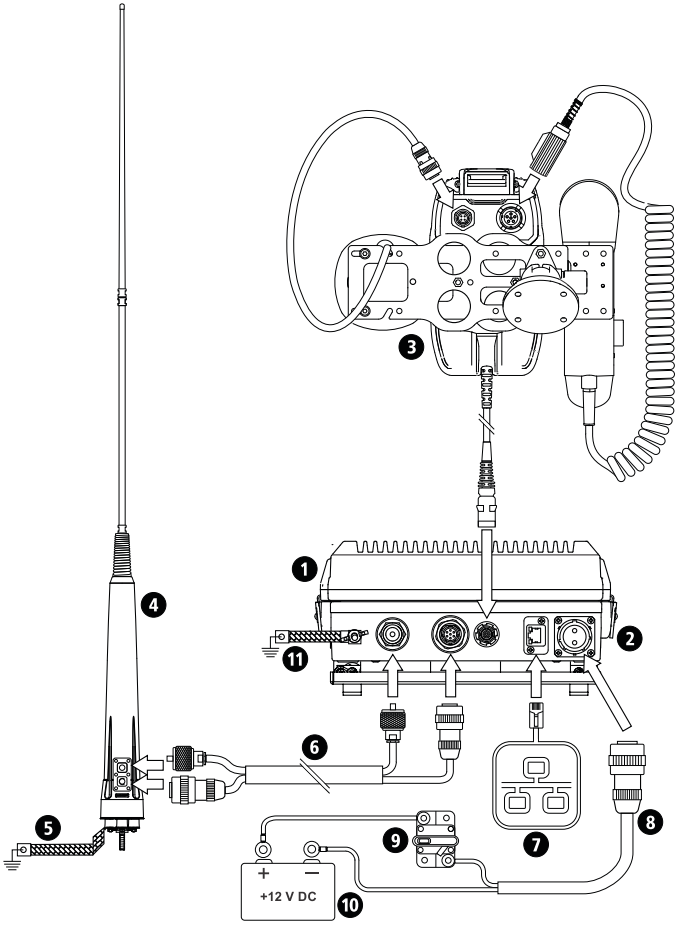

1	Barrett PRC-4090 HF SDR Transceiver (P/N 4090-00-01)
2	PRC-4090 System Docking Station (P/N 4090-05-00) and Anti-Vibration Mounting Plate (P/N 4090-05-07)
3	PRC-4090 Control Handset (P/N 4090-01-09) and Control Handset Docking Station (P/N 4090-05-03)
4	Barrett 2019 MIL-SPEC ATU HF mobile antenna - NATO green (P/N 2019-00-10)
5	Ground (earth)
6	Interface cable 6 m - integral coaxial/control with connectors to suit 4090 SDS (P/N 2019-00-02)
7	IP Network Connection via RJ45 cable
8	DC power cable and connector - 6m (P/N 4090-03-06)
9	Circuit Breaker
10	12 V (or 24 V) DC Battery
11	Ground (earth)

Mounting the Barrett 2019 Automatic Tuning Mobile HF Antenna

The Barrett 2019 antenna should be mounted in positions similar to those illustrated in the diagrams on the following pages. Select a position free from excessive vibration. A bracket, fabricated to withstand the forces and vibration that can be expected during off-road driving, should be used to mount the antenna to the vehicle. When locating the mounting position for the antenna ensure that the antenna body, when flexing on its vibration mount, cannot come into contact with other parts of the vehicle. The antenna should be mounted as far from surrounding objects on the vehicle as possible.

The antenna is supplied standard with two sections (Barrett P/N: BCA201901), a tapered black spring (Barrett P/N: BCA201903), an antenna installation guide and a pre-terminated six metre control cable to suit the Barrett 2019 antenna to transceiver. A six metre (Barrett P/N: BCA201904) or ten metre (Barrett P/N: BCA201905) extension cable for the control cable is also available.

The control cable should be routed into either the engine compartment or boot (trunk) of the vehicle. If the joint between the antenna control cable and the extension cable is in an exposed position, a self-amalgamating/self-bonding tape should be used to seal the joint. Do not wrap this joint if it cannot be made completely water tight as water will collect in the joint and cause it to corrode.

A good ground (earth) to the main body of the vehicle is essential for efficient operation of the antenna. To achieve this, clean all joints to bare metal and use copper braid ground (earth) straps if any non-metallic joints are encountered.

After mounting the main body of the antenna, screw the black base spring onto the antenna body followed by the whip section.

Important Information

It is ESSENTIAL to maintain the minimum clearances between the antenna and surrounding metal work as indicated in the diagrams. FAILURE TO MAINTAIN THESE CLEARANCES WILL NOT ONLY REDUCE THE EFFICIENCY OF THE BARRETT 2019 AUTOMATIC TUNING MOBILE HF ANTENNA BUT MAY ALSO LEAD TO INTERNAL RF ARCING AND FAILURE.

Important:

Considerations on the overall height of the 2019 antenna once fitted should also be considered.

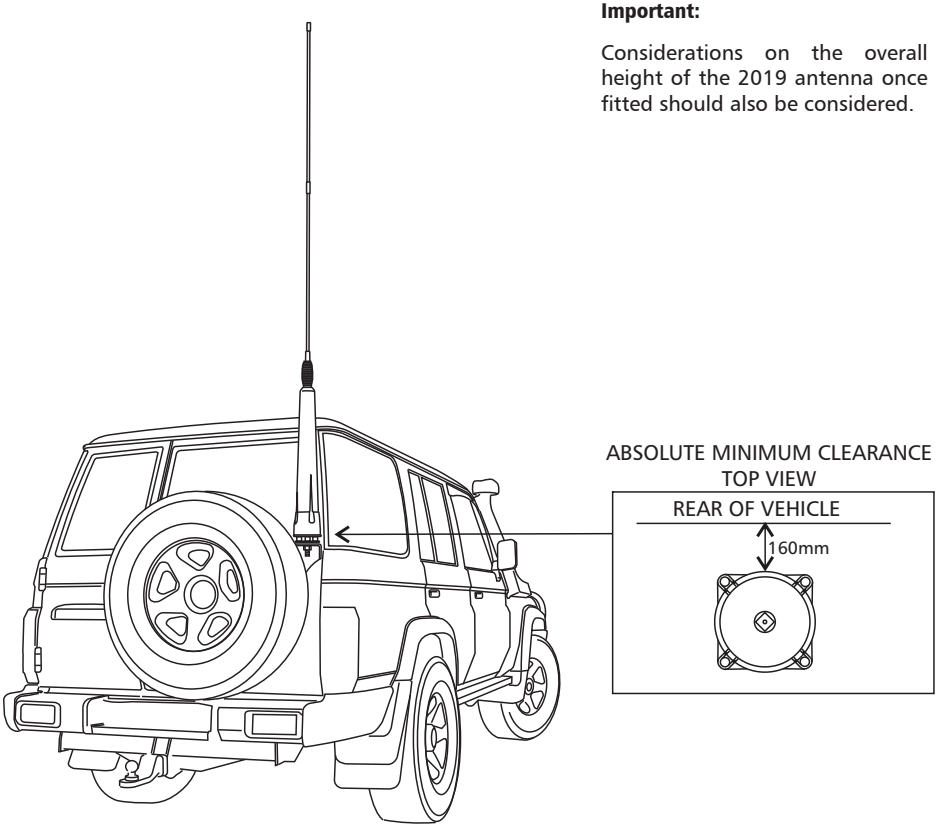

Important:

Please note that the mounting of a 2019 antenna on the front of a vehicle may be considered illegal in some areas / countries. Please check with your local transport / vehicle authority prior to installation on the front of your vehicle.

Considerations on the overall height of the 2019 antenna once fitted should also be considered.

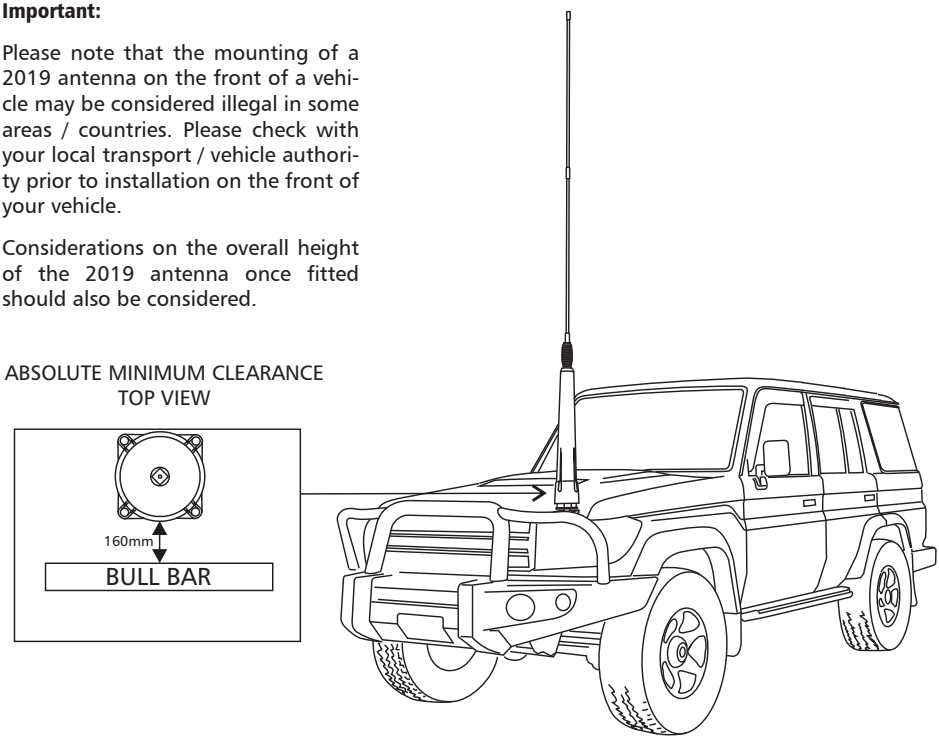

Caution:- Whilst the 2019 automatic tuning mobile HF antenna is designed to withstand vibration to military specifications on tyred vehicles, some mounting positions on large prime-movers, particularly front mounted bull bars, are subject to vibration that far exceeds this specification. Do not mount the 2019 antenna in positions such as these as damage to the antenna may result.

Grounding (Earthing) the Antenna

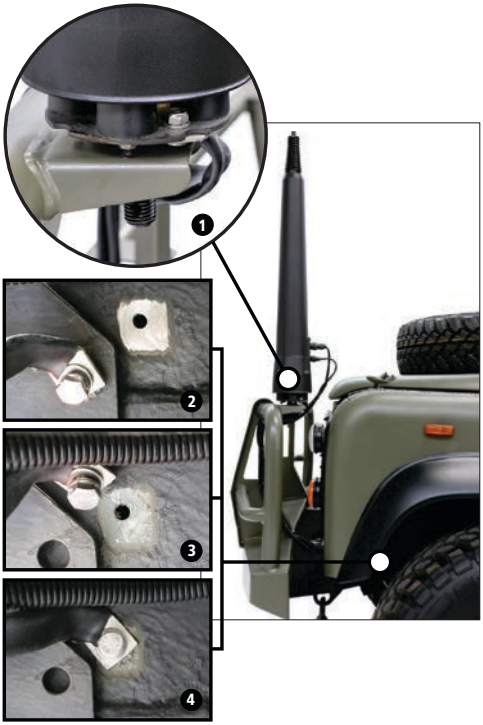

Notes:

1. Connect an ground (earth) strap to the base of the antenna
2. Grind away any paint or coating at the grounding (earthing) point on the chassis to expose the bare metal
3. Apply electrical contact grease to prevent rust and corrosion and maintain the integrity of the ground (earth) connection
4. Attach the ground (earth) strap lug securely with an appropriate fastener.

IMPORTANT: If the antenna is mounted in a high position on the rear door of a vehicle, multiple ground (earth) straps must be used to reach the vehicle chassis's grounding (earthing) point. Ground (earth) conductivity from the antenna to the chassis must be maintained for correct operation of the antenna.

Antenna Assembly

Mounting the Base Spring

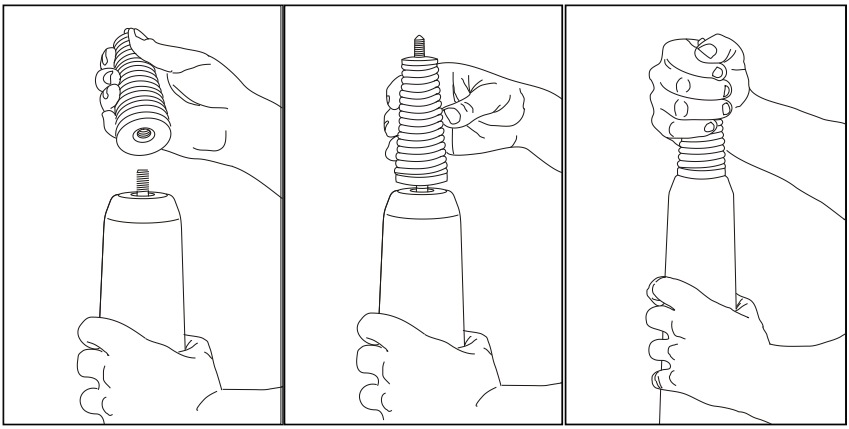

The base spring should only ever be hand tightened, if a tool is used it may damage the spring base.

Mounting the Whip Sections

To mount the whip section it is recommended that only one section of the whip is screwed onto the antenna at a time. The whip section should be hand tightened, then a suitable tool (i.e. a spanner) can be used to tighten the section a further 10 to 20 degrees clockwise while holding the antenna body with a free hand.

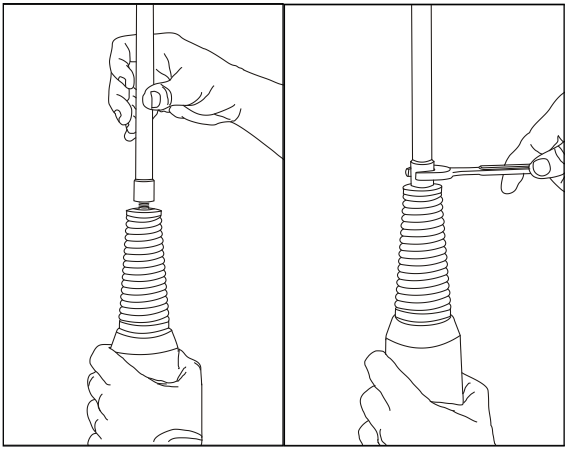

To mount two whip sections together, the unattached whip section should be hand tightened, then a suitable tool (i.e. a spanner) can be used to tighten the section a further 10 to 20 degrees clockwise while holding the already screwed on whip section with a free hand.

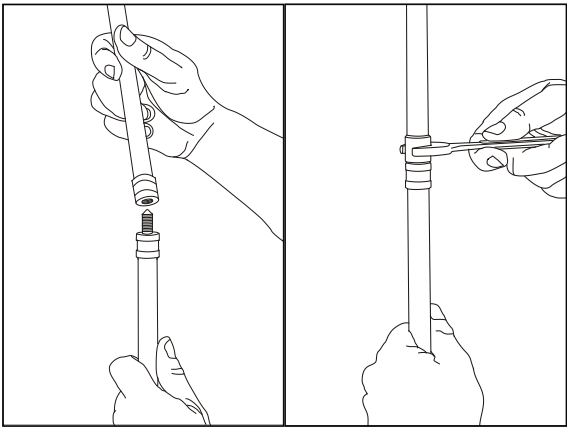

Testing the Barrett 2019 Automatic Tuning Mobile HF Antenna

To test the Barrett 2019 antenna, first select the lowest transmit frequency in the transceiver and tap **Tune**. The display should show the word "Tuning" for a few seconds, followed briefly by "Tune Passed" and an indication of the measured VSWR (Voltage Standing Wave Ratio) value. Check this reading against the VSWR meter.

Repeat the above test on the highest frequency in the transceiver and on a selection of frequencies at approximately 2 MHz intervals. If the tune passes every time, the Barrett 2019 antenna is working correctly. The Barrett 2019 antenna tunes to maximise whip current, not minimise VSWR, but the displayed VSWR value should generally be between 1.0:1 and 2.0:1. However, if the display shows "Autotune Fail" accompanied by low pitched beeps, the Barrett 2019 antenna has failed to tune. Confirm the "Antenna Type" is selected to "2019 Mobile Ant" in the transceiver Menu Settings < IO < Antenna Type setting (page 24). For possible causes check that all cables are properly connected, the earth cable from the base of the Barrett 2019 antenna has a good connection to the vehicle body (not chassis or battery), the whip fitted is not faulty or incorrect and move the vehicle if the Barrett 2019 antenna is close to any metal fences, buildings etc. If the problem cannot be resolved, contact your dealer or Barrett Service Department for advice.

NVIS Kit for 2019 antenna - P/N BCA201910

The Barrett Near Vertical Incidence Skywave (NVIS) antenna whip is designed to enhance the short range communications efficiency of the Barrett 2019 Automatic Tuning Mobile HF Antenna. The increased whip length combined with its horizontal orientation (once installed) provides a significantly higher take off angle and radiation efficiency. Communications paths over the range 20 - 500 kms, particularly in hilly and mountainous terrain, can be greatly improved through the use of the NVIS kit.

The NVIS kit comprises of a single flexible whip section of 4 metres in length which replaces the two section whip (BCA201901) supplied with the Barrett 2019 Antenna. It has fittings at each end to attach to the 2019 antenna and the optional NVIS Kit Magnetic Mounting Base (BCA201911). The whip can also be secured to the vehicle without the magnetic mounting base by using a custom made bracket with a 13mm hole (sourced by end user). This option may be preferable if the vehicle is fitted with a roof rack for example.

NVIS whip with end fittings

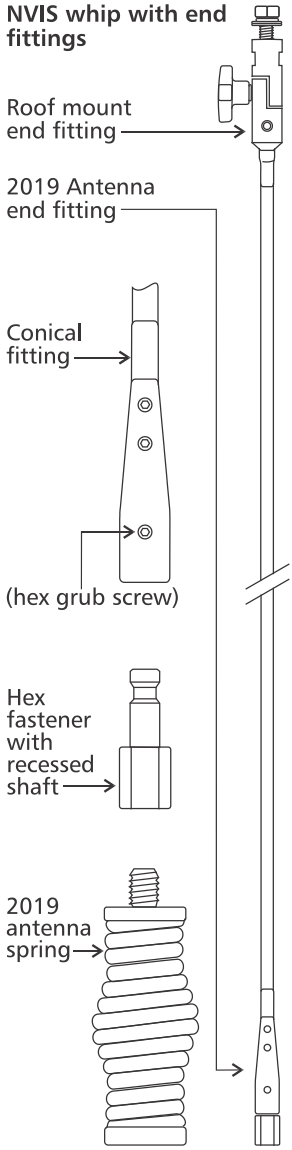

The NVIS kit can be installed as follows:

1. Remove the existing 2019 antenna whip, leaving the spring in place.
2. Unscrew the lowest hex grub screw on the 2019 antenna end of the whip so that the hex fastener with recessed shaft can be removed.
3. Tighten the hex fastener with recessed shaft onto the top threaded stud of the antenna spring with an appropriate tool.
4. Place the conical fitting over the recessed stud and tighten the hex grub screw enough so that the conical fitting can rotate but can not be separated from the recessed shaft. This will allow the conical fitting to rotate while the roof mount end is being attached and also prevent antenna end fitting damaging the vehicle by becoming detached while attaching the roof mount end.
5. Attach the roof mount end of the whip to an appropriate location (see figure 1 as a guide). It could be attached to the optional NVIS kit magnetic mounting base (see figure 3), optional NVIS kit gutter mount bracket (see figure 4) or to a custom fabricated bracket (with 13mm hole). If the magnetic mounting base is used the roof mount end must be locked into one of three angle positions by locating the pin on the surface of one side of the fitting into the hole on the surface of the other side of the fitting (see figure 2). Once the correct angle is achieved tighten the knob firmly by hand.
6. Once the roof mount end is securely in its final position, tighten the hex grub screw that was loosened in step 2.

Figure 1 Example of front and rear antenna mounting using optional Magnetic Mounting Base (P/N BCA201911).

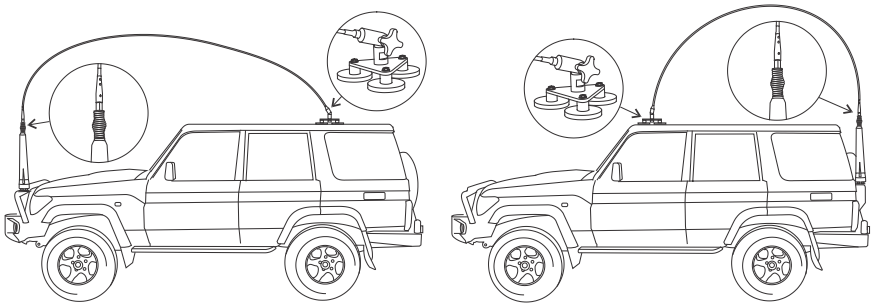

Figure 2 Adjustable roof mount fitting showing locating pin and locating holes.

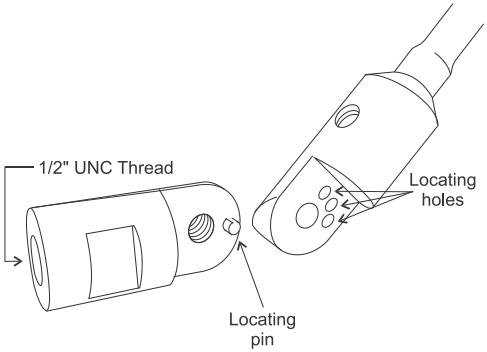

Figure 3 NVIS Kit Magnetic Mounting Base (optional) P/N BCA201911.

Base shown here with roof mount fitting attached.

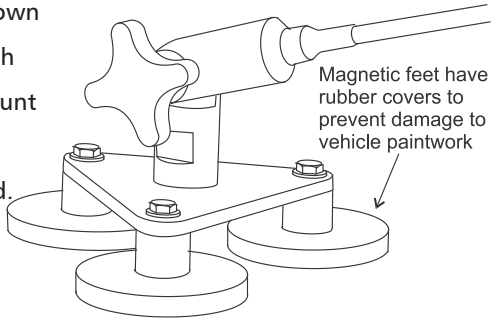

Figure 4 NVIS Kit Gutter Mount Bracket (optional) P/N BCA201912.

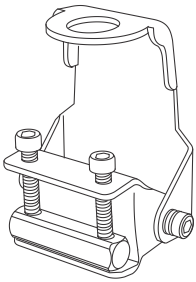

2018 Mobile Magnetic Loop Antenna

The roof rack has been designed by Barrett Communications Pty. Ltd. as an integral part of the antenna system. The ground (earth) plate is a heavy-duty aluminium mesh floor, welded to an enclosing frame which maximises current in the radiating loop. The 2018 Barrett Mobile Magnetic Loop Antenna shields and isolates vehicle ignition noise and interference from adjacent power lines providing greater communication clarity.

The 2018 Mobile Magnetic Loop HF Antenna is designed for universal mounting. The roof rack comes in a range of mounting bracket options. Solutions are available that will allow clamping to the roofs of 4WDs, sedans, buses, trucks and prime movers. It is designed to minimise head wind noise with an angled deflector mounted on the front of the unit.

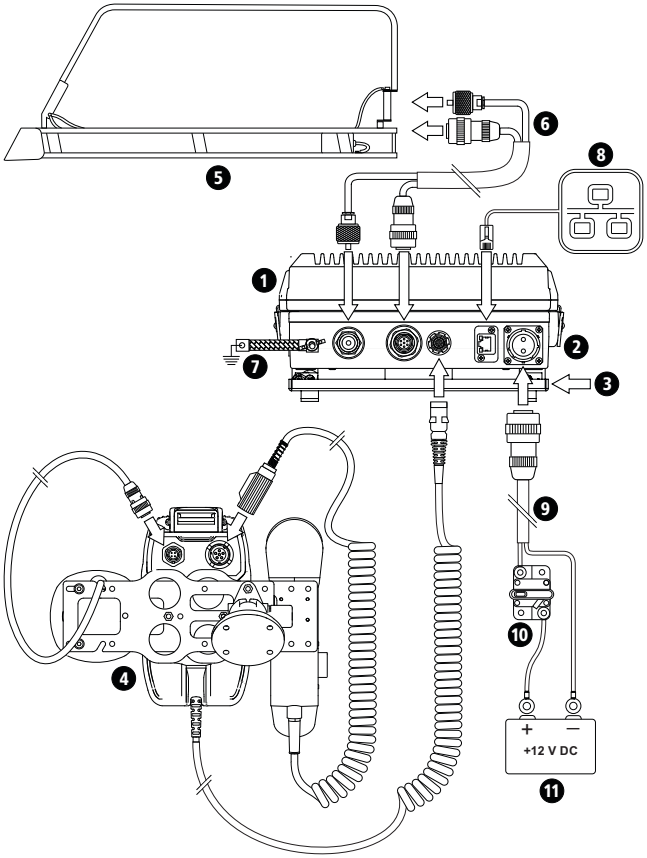

Connection Details for a PRC-4090 Transceiver with Mobile Pack and a 2018 Mobile Magnetic Loop Antenna

1	Barrett PRC-4090 HF SDR Transceiver (P/N 4090-00-01)
2	Barrett PRC-4090 System Docking Station (P/N 4090-05-00)
3	Anti-Vibration Mounting Plate (P/N 4090-05-07)
4	PRC-4090 Control Handset (P/N 4090-01-09) and Control Handset Docking Station (P/N 4090-05-03)
5	2018 Mobile Magnetic Loop Antenna (P/N BC201801)
6	Control & Coaxial Cable 6m (P/N BCA201904)
7	Ground (earth)
8	IP Network Connection via RJ45 cable
9	Interface cable 6 m - integral coaxial/control with connectors to suit 4090 SDS (P/N 2019-00-02)
10	Circuit Breaker
11	12 V (or 24 V) DC battery

Base Station Installations

The PRC-4090 base station setup combines the PRC-4090 HF SDR Transceiver with the Sytem Docking Station and the PRC-4022 AC Power supply. This setup can be combined with other Barrett products to provide a situation specific HF communications solution.

Assembly

1. Before starting, ensure that the lock clamps are released and in a horizontal position.
2. Place the SDS on top of the PRC-4022, ensuring that the four capstans are correctly aligned and drop into the keyway slots.

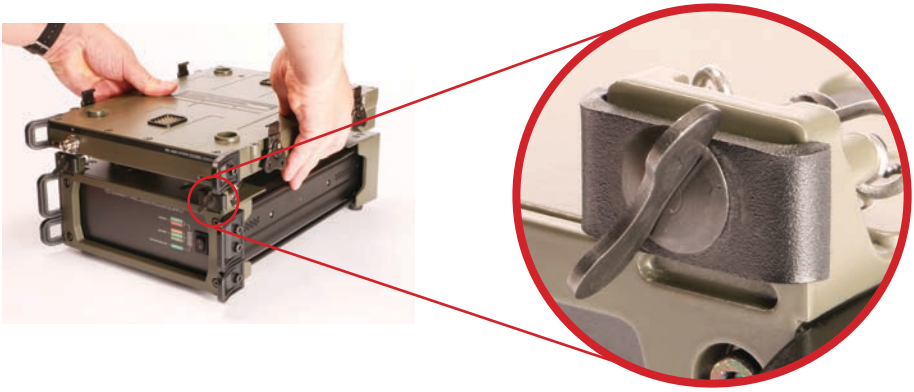

3. Push the SDS towards the rear of the power supply as shown below so that the capstans and SDS click into place.

4. To secure the SDS, first rotate the lock clamps back into a vertical position, then turn the fasteners a quarter turn. The locks should click into place.

5. With the side latches folded outwards, place the PRC-4090 transceiver on top of the SDS so that the locating feet meet their corresponding holes.

6. Fold the side latches back into position and turn the fasteners to secure.

Cooling Fan

The cooling fan is an optional extra which may be added to the PRC-4090 transceiver for situations where high volumes of data or Digital Voice transmissions may cause the transceiver's internal temperature to rise above 65°C.

The cooling fan requires no user input as it is temperature controlled by software, automatically activating when necessary.

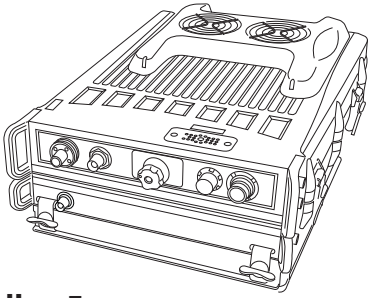

Installing the Cooling Fan

Attach the cooling fan to the transceiver by carefully aligning the connector pins located beneath the cooling fan with the socket on top of the transceiver as shown below.

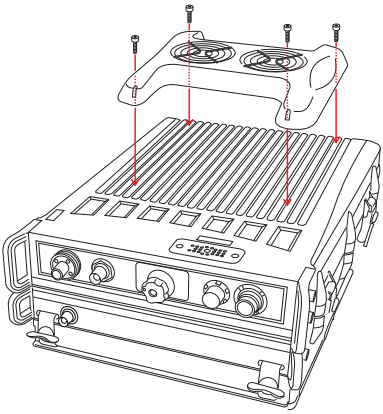

Four screws (located in the four corners of the cooling fan) are used to secure the cooling fan to the SDR.

To uninstall the cooling fan, reverse the installation procedure.

Connection Diagram

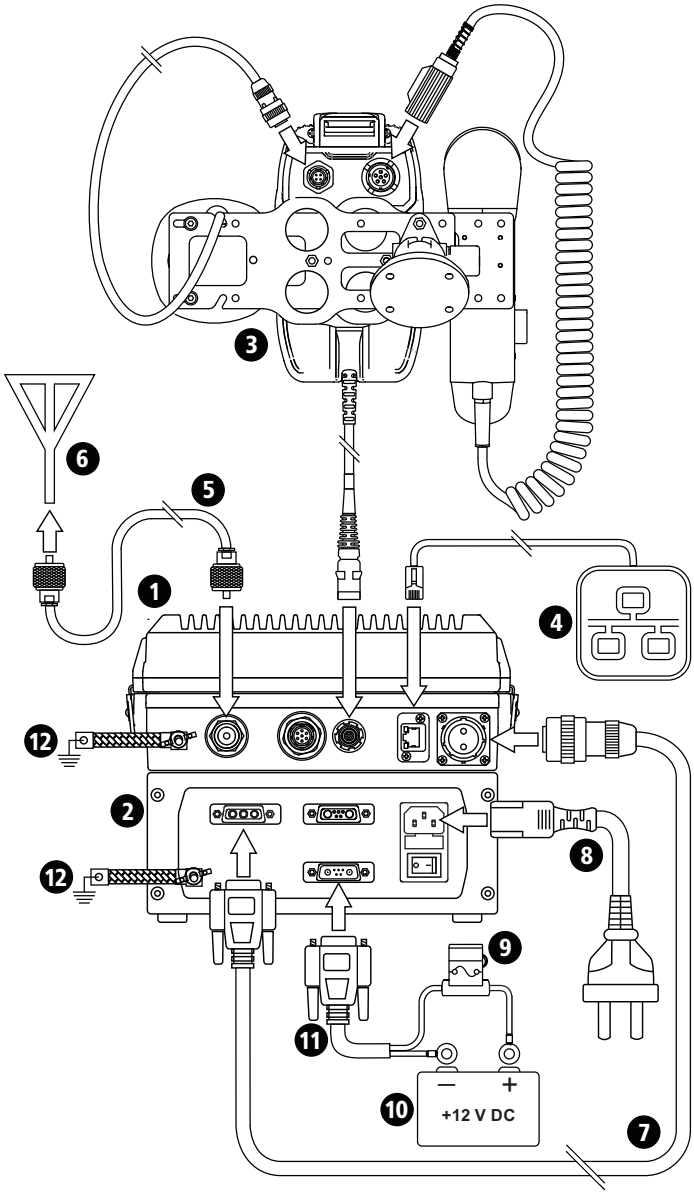

1	Barrett PRC-4090 HF SDR Transceiver (P/N 4090-00-01) and System Docking Station (P/N 4090-05-00)
2	PRC-4022 AC Power Supply (P/N 4090-06-01)
3	PRC-4090 Control Handset (P/N 4090-01-09) and Control Handset Docking Station (P/N 4090-05-03)
4	IP Network connection via RJ45 cable
5	Coaxial cable
6	Antenna
7	Power cable from Barrett PRC-4090 SDS to PRC-4022 Power Supply (P/N 4090-03-02)
8	IEC mains cord (P/N SA-00020)
9	Circuit Breaker
10	12 V (or 24 V) DC Battery
11	3 metre battery back-up cable for PRC-4022 Power Supply (P/N 4090-06-08)
12	Ground (earth)

Site Selection Recommendations

The success of every HF Radio system is primarily measured by its ability to receive weak signals and to transmit RF power efficiently. A number of important factors need to be considered to achieve success. These include: frequency selection, time of day and ambient noise at the receiver site. Frequency and time of day are factors which can be used to calculate the maximum usable frequency (MUF) and lowest usable frequency (LUF) using prediction software freely available on the internet. A typical example of this is VOACAP, http://www.voacap.com/prediction.html

Site selection and system design go hand in hand and should be considered before any equipment is purchased. Forcing the radio system into an unsuitable site will undoubtedly result in disappointing if not unworkable performance of the system. Little can be done to improve an installed system if, for example, the ambient RF noise is unacceptably high.

It is recommended that site evaluation be done before any system designs are finalised to avoid system performance disappointment.

The following should be considered when choosing a position for the transceiver:

Operating Convenience

The transceiver should be placed so that the operator is comfortable and any required facilities are easily accessible.

Air Circulation

The PRC-4090 relies on air flow around cooling fins to dissipate heat generated by the transmitter. The mounting position must allow free air flow around these fins.

Proximity of Transceiver to Antenna

When using RG-58 coaxial cable from the transceiver to the antenna, a cable length of no more than 30 metres is recommended. Should a run of more than 30 metres be required, it is recommended that a low loss coax such as RG-213 or RG-8 be used.

It is recommended that the transceiver chassis is connected to ground (earth) using the post on the rear panel to stop pick-up of unwanted noise from local power supplies and electrical equipment.

Power Supply

When 24 V DC is supplied to the PRC-4090 transceiver, the PEP Voice output power will achieve 150 W. This is only available with the PRC-4090 Sytem Docking Station.

Power output regulation is performed automatically based on the DC voltage presented to the transceiver DC input connector. The Barrett 4022 Power Supply is available in the BC402201 (24 V DC) version. This power supply version is capable of operation with AC mains input voltage between 88 and 256 V AC.

In base station installations where no mains supply is available, various Barrett solar power supply solutions are available depending on the system configuration requirement.

Note: Some installations use an AC battery charger to float charge the supply battery. Battery chargers can produce electrical noise from the rectifier diodes. This noise causes a static type of interference in the receiver. It may be necessary, therefore, to switch off the battery charger whilst the transceiver is in use. If float charging of batteries is required for installations with unreliable AC power supply, it is recommended that BC402201 be used as it provides a three stage charge facility to maintain a battery without the noise problem described above.

Voltage Drop

The average current consumption of the transceiver is low but during transmission of voice peaks, high current is needed for short intervals. This means that the power supply cable must be heavy enough to supply these short duration current peaks without excessive voltage drop. Preferably, only use the power cable supplied with the transceiver. If extra cable is required, use a cable with a conductor square area of no less than 8 mm^2. Unwanted voltage drop will also occur if incorrect wiring techniques such as poor choice of connection points and incorrect use of terminal lugs are used.

Protection Fuse

The transceiver is provided with adequate internal protection from over-current or short-circuit. The fitting of an additional external fuse is still considered necessary for both the protection of the transceiver and to ensure that in the event of damage to the cable, a fire does not occur. The fuse used must be installed in the active wire as close as possible to the battery, and must be of a type which has a low voltage drop at the peak currents expected.

Note: In-line 3AG glass fuses are not suitable. An ATC automotive blade type fuse rated at 25 A with a suitable high current ATC fuse holder rated at 30 A or more should be used. These type of fuses and holders are contained in our standard installation kit (P/N BCA40004) or are available individually (P/N BCA20021).

Antennas

The antenna is a most critical part of the complete transciever installation. It must accept the output power from the transmitter, radiate that power with minimum loss and in the receive mode, accept weak signals for input to the receiver.

Incorrect antenna installations will yield poor system performance and are often the cause of complaints of poor transceiver performance.

A range of antennas is available from Barrett to suit most small fixed stations. Detailed instructions are included with each antenna.

912 Multi wire Broadband Dipoles

(P/N BC91200, BC91202 and BC91203)

Barrett 912 broadband dipoles are ideal for base stations that require operation on multiple frequencies throughout the HF spectrum using a single antenna.

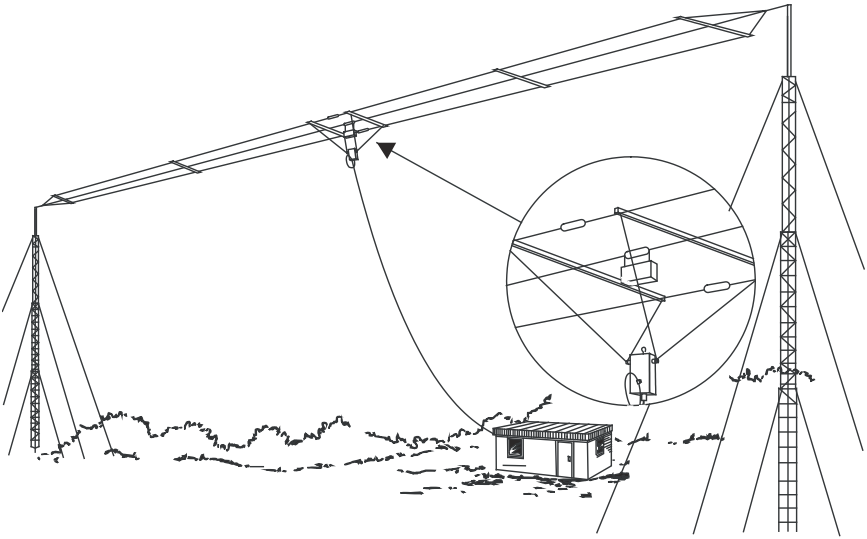

The Barrett 912 antenna can be mounted either in a horizontal or inverted 'V' configuration as illustrated in the following diagrams. In the horizontal configuration, the major radiation direction is broadside to the antenna. When mounted in the inverted 'V' configuration, the antenna becomes fairly omni-directional. In the horizontal configuration, the minimum distance between the masts is 32 metres and the recommended mast height is 15 metres. In the inverted 'V' configuration the recommended mast height is 15 metres and at this height the 2 metre stub masts are each installed at a minimum of 19 metres from the mast base. In this configuration the mast must have an offset or out-rigger bracket, at least 0.8 metres long, to hold the antenna away from the mast. Support towers may be either lattice masts as illustrated, tubular telomasts or other support structures that may be available locally. It is recommended that the halyards used to support the antenna be either UV stabilised Dacron cord or wire rope and that pulleys should be of stainless steel construction.

Install the antenna as illustrated in the diagrams, in the inverted 'V' configuration the eye on the top of the balun is used to attach the support halyard. In the horizontal configuration the balun hangs below the antenna.

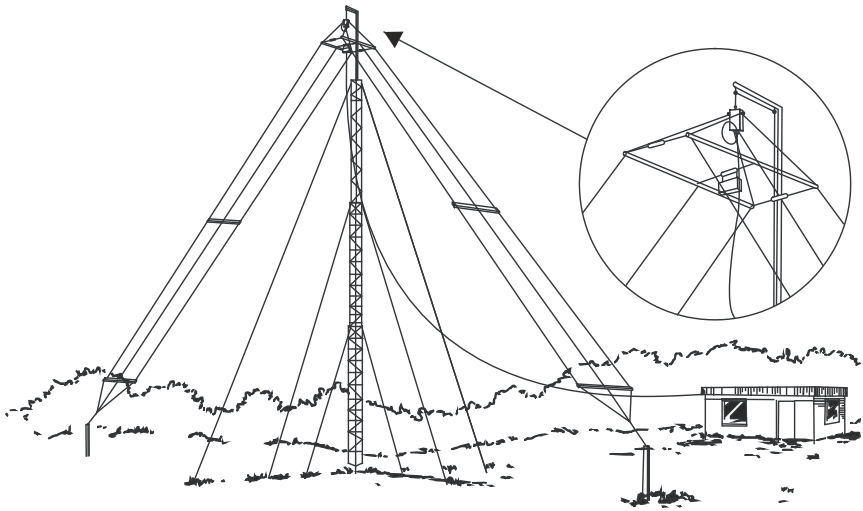

As with all antenna installations ensure the antenna is as far from sources of electrical interference as possible and in a position that makes it impossible for the antenna to come in contact with high voltage overhead mains wiring.

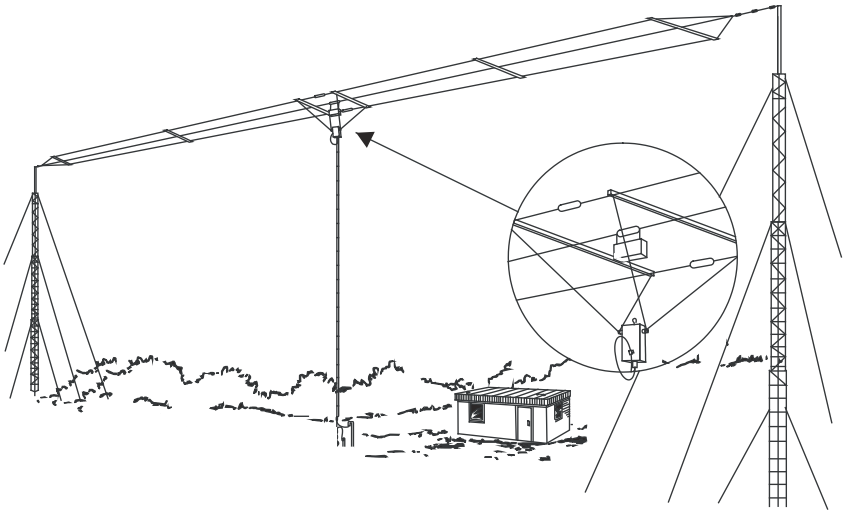

912 Multi-wire broadband dipole antenna - 1Kw (27M/54M) (P/N BC91203/BC91207)

4017 Automatic Tuning Horizontal Dipole Antenna

The Barrett 4017 Automatic Tuning Horizontal Dipole Antenna is designed for conditions where area is limited but a high performance base station antenna is still required. It consists of composite radiation elements driven by an automatic antenna tuner to allow operation from 3 to 30 MHz. The tuner provides broadband impedance matching during scan mode (receive) operation, for reliable link establishment using modern radio protocols.

The antenna is designed for operation on a 6 to 10 metre standard 50 mm mast making it simple to install. With a packed length of 2.1 metres the antenna can be easily transported by air.

Assembly fixtures are supplied to assist in mounting the antenna to an existing mast, tower or pole. Alternatively, a range of suitable masts can be supplied with the antenna.

The tuner has a memory system that stores tuning information for each channel after an initial tune sequence with unlimited capacity.

For further information regarding the 4017 Automatic Tuning Horizontal Dipole Antenna, please consult the 4017 Automatic Tuning Horizontal Dipole Antenna User Manual (P/N BCM401700).

Connection Details for a PRC-4090 Transceiver and 4017 Automatic Tuning Horizontal Dipole Antenna

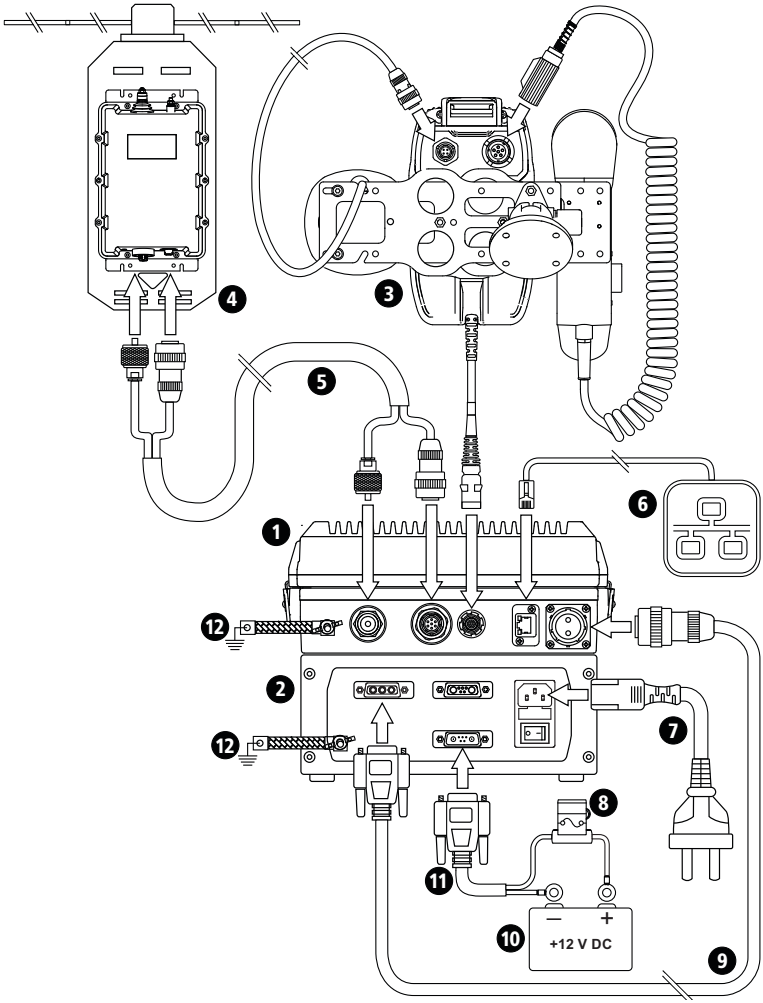

1	Barrett PRC-4090 HF SDR Transceiver (P/N 4090-00-01) and System Docking Station (P/N 4090-05-00)
2	PRC-4022 AC Power Supply (P/N 4090-06-01)

3	PRC-4090 Control Handset (P/N 4090-01-09) and Control Handset Docking Station (P/N 4090-05-03)
4	4017 Tactical HF ATU base antenna (P/N 4017-00-01)
5	Coaxial / Control Cable (P/N 4017-01-01)
6	IP Network via RJ45 cable
7	IEC Mains cable (P/N SA-00020)
8	In-line Fuse
9	Power cable from Barrett PRC-4090 SDS to PRC-4022 Power Supply (P/N 4090-03-02)
10	12 V (or 24 V) DC Battery
11	3 metre battery back-up cable for PRC-4022 Power Supply (P/N 4090-06-08)
12	Ground (Earth)

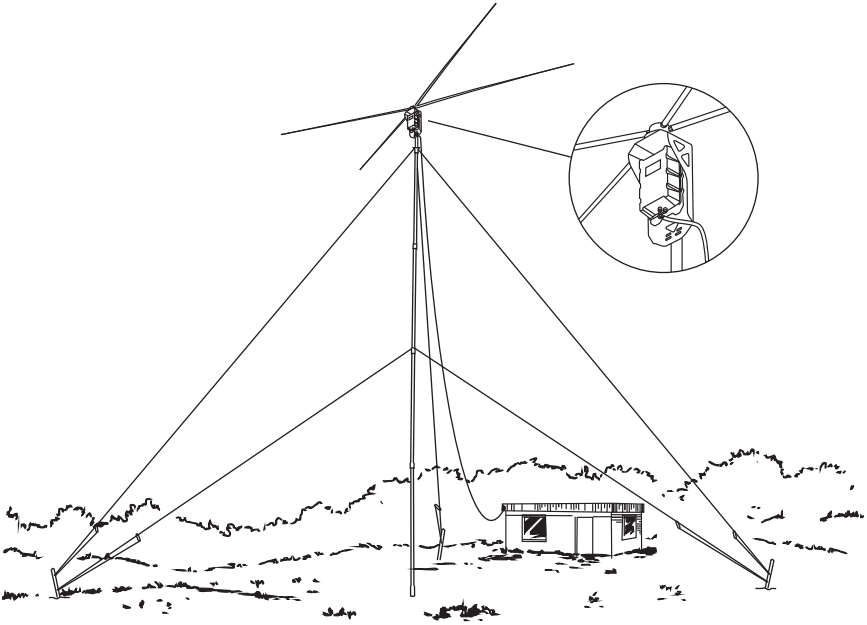

4011 Automatic Antenna Tuner for Base Station Installations

Antennas such as long-wires, vertical whips and loop configurations require an Antenna Tuning Unit to operate correctly.

Housed in a fully weatherproof enclosure, the 4011 will tune long wire antennas effectively up to a length of 10 metres and wire loop antennas or whip antennas over a frequency range of 2 to 30 MHz. Tuning is rapid, typically less than one second the first time RF is applied, either whilst the operator is talking or when the "Tune" control is activated on the transceiver (see page 107).

The 4011 tuner features a memory facility that stores the configuration required to tune to a frequency. On any subsequent use of that frequency, the 4011 reconfigures to the stored settings in typically less than 130 milliseconds. Following initial tuning, the antenna's VSWR is monitored. If any significant variation occurs, the 4011 will re-tune the antenna automatically.

The 4011 is supplied complete with coaxial / control cable having an overall length of 30 metres (P/N 4017-01-01). The cable is a composite design incorporating coaxial, power supply and control cables.

Antenna

The following points should be considered when mounting an antenna with the 4011:

- The antenna should be mounted as far away as possible from buildings, trees, vegetation and sources of electrical interference. If metallic masts or supports are used, arrange insulators to ensure the antenna is spaced at least two metres from the mast.
- The radiating part of the antenna starts at the tuner. The base of the antenna should be centrally located as per above criteria.
- High voltages are present on the antenna system. The antenna tuner and antenna should be located or protected so that there is no possibility of accidental contact or danger of RF burns.

Transceiver and Tuner Mounting

The transceiver should be mounted in a suitable position allowing easy operator access. The antenna tuner should be mounted, preferably out of the weather, and as close to the ground (earth) point as possible. The interconnect cable supplied with the antenna tuner should be routed, away from other cables, back to the transceiver and connected as indicated in the diagram. The maximum interconnect cable should be less than 25 metres.

Ground (Earth) System

The ground (earth) system is a key part of the overall antenna system and consequently the system operation. An inadequate ground (earth) system is the primary cause of poor performance and tuning problems. Unless a good ground (earth) system (counterpoise) can be provided, there is little point in installing the antenna. In areas of good ground (earth) conductivity (i.e. the terrain is always damp), an effective ground (earth) can be made through a grounding (earthing) rod. This should be a minimum 1.5 metres in length and should be installed as close to the tuner as possible. A suitable grounding (earthing) can be purchased from Barrett Communications (P/N BCA90056). Several rods bonded together will improve the ground (earth) contact. In some cases metal water pipes may be used as a ground (earth) providing:

- The water pipe is close to the tuner and the water pipe enters the ground close to the tuner.
- There are no joints or couplings in the pipe that will increase the resistance path to ground.
- The water pipe enters soil with good conductivity.
- A low resistance joint is made with the water pipe.

Frequently the ground (earth) conductivity will not be sufficient to provide a satisfactory ground (earth) for the Barrett 4011 tuner. This will almost certainly be the case in well drained sandy soils or on rock. In these cases, a counterpoise must be used as a ground (earth) system. This will also be the case in rooftop installations where no existing ground plate (such as metal roofing) exists.

The number of radials required for an effective counterpoise depends on the soil quality, dampness and other factors which affect the conductivity of the soil. The more radials used, the better will be the performance of the antenna/ATU combination especially at lower frequencies. This manual suggests a minimum of 20 radials, but optimum performance at low frequencies is not guaranteed.

The radials of the counterpoise need only be of much thinner cable i.e. 5.48mm^2 (#1 #2 SWG) preferably copper wire. RG58 Coaxial cable may be used. At the base of the antenna, the radials all couple together at a common well bonded antenna ground (earth) point. The radials should be buried into the ground to a minimum of 200 mm depth.

Note: To accomplish reliable ATU tunes at frequencies below 5 MHz, it is not uncommon, with poor conductive soil conditions, to require up to 120 radials each of up to 70 m length, requiring thousands of metres of cable and a lot of trenching. This is impractical and is the reason we do NOT recommend Whip/ATU antenna for land based systems.

Electrical Checkout

After mechanical installation is complete, select the highest frequency to be used on the transceiver. A directional watt-meter may be inserted in the coaxial transmission line between the transceiver and the tuner, although the internal metering of the Barrett PRC-4090 Transceiver is accurate. The tune mode on the transceiver is then energised. Upon application of RF energy, the tuner should start to tune, indicated by the 'clattering' of the tuner relays. After a few seconds the relay noise will cease, the transceiver should indicate "Tune OK" and the watt-meter and PRC-4090 handset should show a low value reflected power consistent with a VSWR of better than 2:1. Select the lowest desired frequency on the transceiver and repeat the above procedure. The result should be the same, except that the tune cycle may take somewhat longer. If the above procedure does not give the results indicated, check that the antenna length and connections are correct and re-check all ground (earth) connections.

Note: When received, the Barrett 4011 automatic antenna tuner memory system will not have any pre-stored tuning information appropriate to your installation. To allow the 4011 to 'learn' its tuning information, simply proceed from one channel to the next allowing the normal tune cycle to take place. Each successful tune is 'memorised' so that when that channel is re-selected the tuner will almost instantaneously retune to that frequency.

Connection Details for a PRC-4090 Transceiver and 4011 Automatic Antenna Tuner in a Base Station Configuration

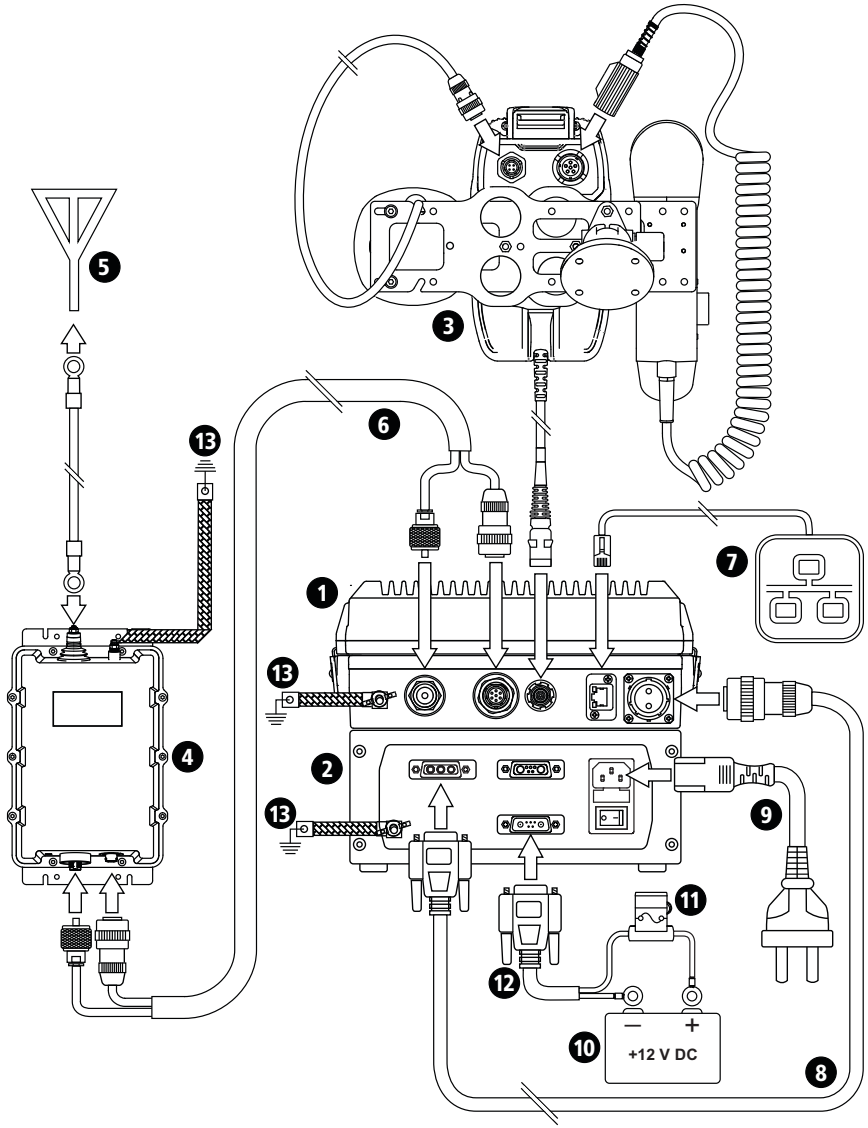

1	Barrett PRC-4090 HF SDR Transceiver (P/N 4090-00-01) and System Docking Station (P/N 4090-05-00)
2	PRC-4022 AC Power Supply (P/N 4090-06-01)
3	PRC-4090 Control Handset (P/N 4090-01-09) and Control Handset Docking Station (P/N 4090-05-03)
4	Barrett 4011 Automatic Antenna Tuner (P/N 4011-00-01)
5	Antenna
6	Coaxial / Control Cable (P/N 4019-00-02)
7	IP Network Connection via RJ45 cable
8	Power cable from Barrett PRC-4090 SDS to PRC-4022 Power Supply (P/N 4090-03-02)
9	IEC mains cord (P/N SA-00020)
10	12 V (or 24 V) DC Battery
11	In-line Fuse
12	3 metre battery back-up cable for PRC-4022 Power Supply (P/N 4090-06-08)
13	Ground (Earth)

Connection Details for a PRC-4090 and a Military Whip Installation

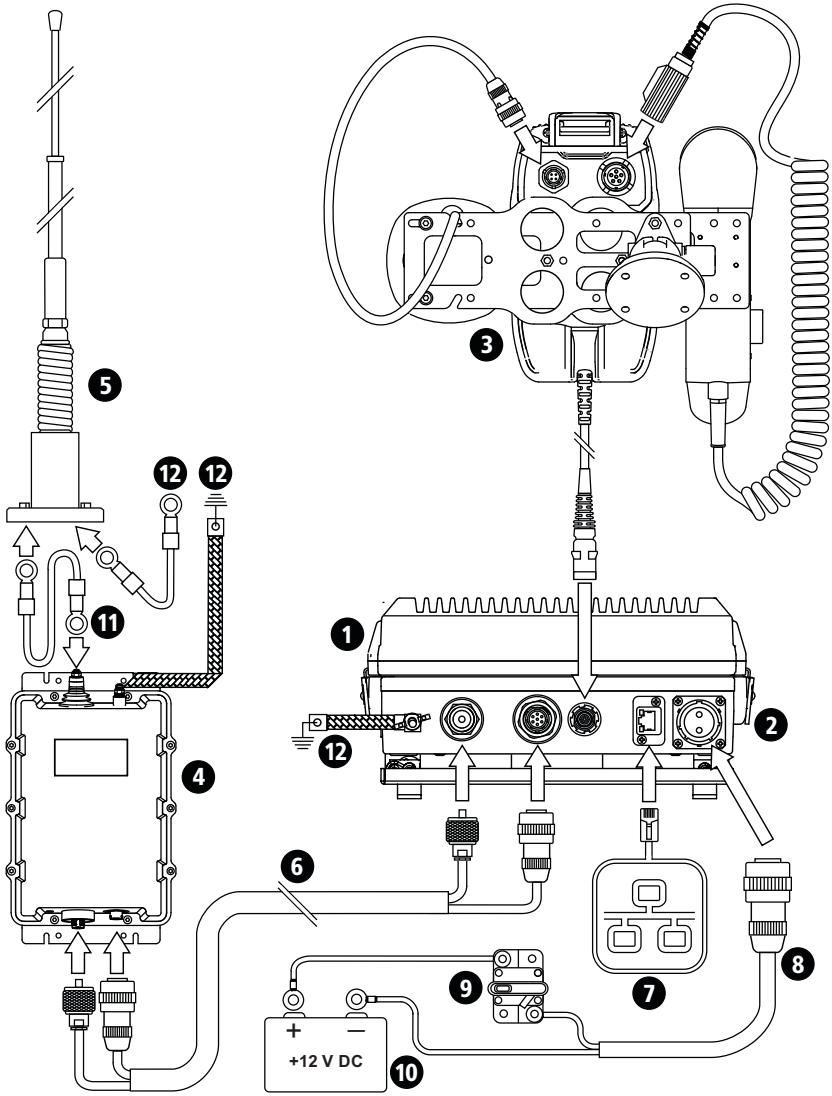

1	Barrett PRC-4090 HF SDR Transceiver (P/N 4090-00-01)
2	Barrett PRC-4090 System Docking Station (P/N 4090-05-00) and Anti-Vibration Mount (P/N 4090-05-07)
3	PRC-4090 Control Handset (P/N 4090-01-09) and Control Handset Docking Station (P/N 4090-05-03)
4	Barrett 4011 Automatic Antenna Tuner (P/N 4011-00-01)
5	Military Whip (base P/N 2090-07-15, whip P/N 2090-07-14)
6	Coaxial / control cable (P/N 4019-00-02)
7	IP Network Connection via RJ45 cable
8	DC power cable to Battery (P/N 4090-03-06)
9	In-line Fuse
10	12 V (or 24 V) DC Battery
11	Cable from 4011 Automatic Antenna Tuner to military whip (P/N 4019-00-02)
12	Ground (earth)

Tactical Broadband Dipole Antenna (2090-02-03)

The Tactical Broadband Dipole Antenna is a dipole antenna with loading to allow broadband operation. For operation, each side of the antenna is unwound to its full length. Throwing cords are provided that can be used to elevate the antenna or tie it to ground for an inverted V configuration. The antenna will handle continuous data and CW transmission. The antenna can be used in a number of configurations, depending on structures available for elevation.

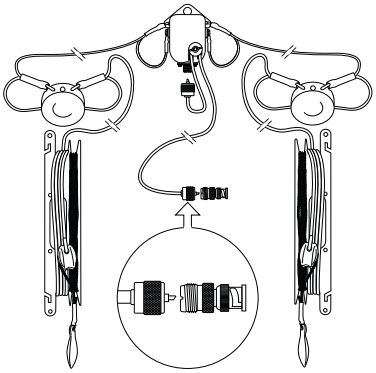

Tactical Broadband Dipole Antenna Configurations

Horizontal Dipole

The horizontal dipole has maximum gain on the broadsides of the antenna and reduced gain along the axis. Height above ground affects radiation angle. Lower heights give higher angle radiation, better for NVIS (short distance). Higher heights give lower radiation angle, better for long distance communication.

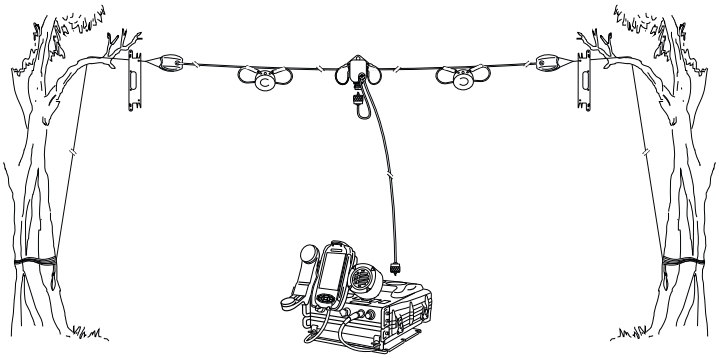

Inverted V

The inverted-V has a more omni-directional pattern than the Horizontal Dipole, with lower maximum gain. The ends of the antenna should be at least 0.5 m above ground. Suitable mainly for NVIS and medium distance.

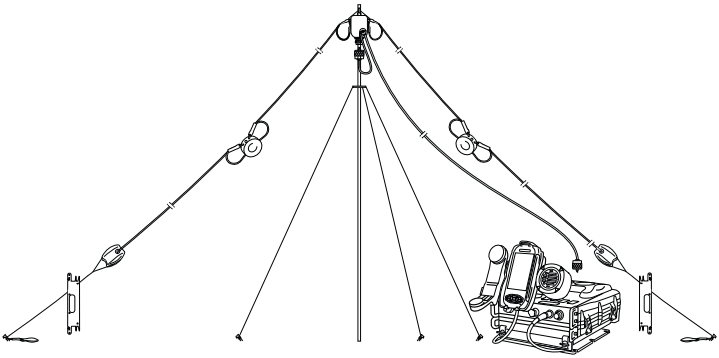

Sloping Dipole

Radiation with the Sloping Dipole becomes more directional, with increased gain in the direction of the lower end of the antenna, and reduced gain towards the higher end.

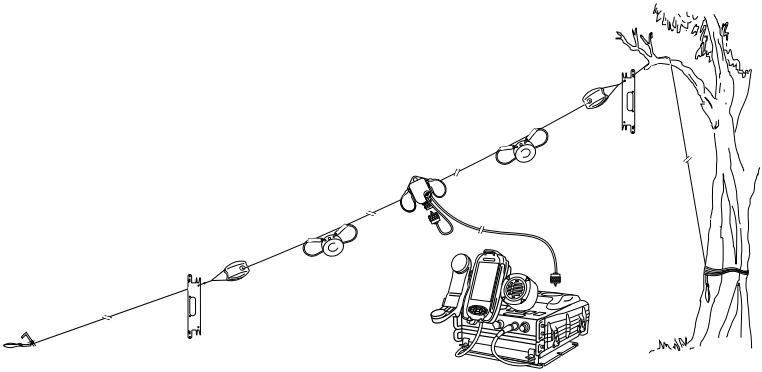

Inverted U

The inverted U has a radiation pattern between that of horizontal dipole and inverted V. For optimum performance, the radiating elements should be fully unwound, and should not touch the ground. Suitable for NVIS to medium distance. Longer distance performance will be enhanced by erecting the antenna at a height of 10 m or more.

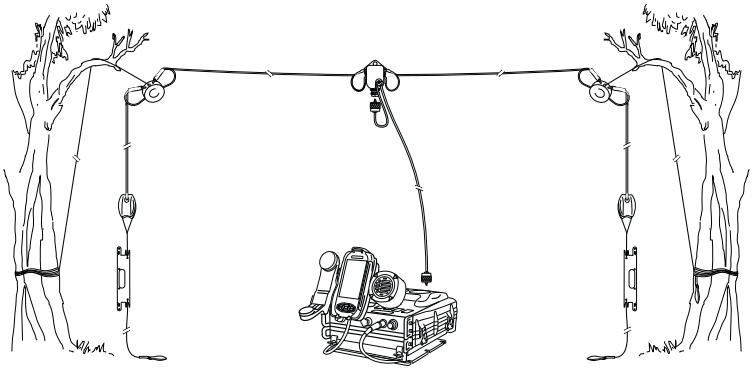

Tactical Tuned Wire Dipole Antenna (2090-02-01)

The Tactical Tuned Dipole Antenna is a tuned antenna with frequency labels to indicate tuned lengths. For operation, each side of the antenna is unwound to the tuned length for the frequency required. For operation at a labelled frequency, the label should be level with the end of the winder as shown in the picture below. Lengths for intermediate frequencies should be estimated and tied off appropriately. The remaining wire remains on the winder. The throwing cord can then be used to elevate the antenna. The antenna will handle 100 W continuous data and CW transmission. The antenna can be used in a number of configurations, depending on structures available for elevation.

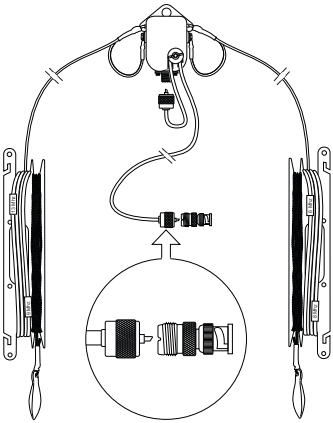

Tactical Tuned Wire Dipole Antenna Configurations

Horizontal Dipole

The horizontal dipole has maximum gain on the broadsides of the antenna, and reduced gain along the axis. Height above ground affects radiation angle. Lower heights give higher angle radiation, better for NVIS (short distance). Higher heights give lower radiation angle, better for long distance communication.

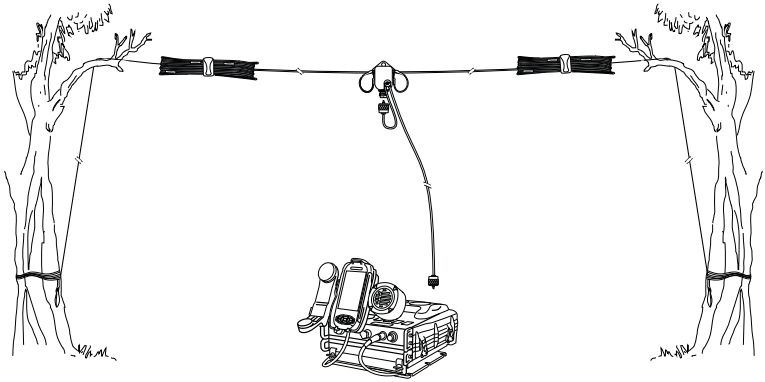

Inverted V

The inverted-V has a more omni-directional pattern than the Horizontal Dipole, with lower maximum gain. The ends of the antenna should be at least 1 m above ground. Suitable mainly for NVIS and medium distance.

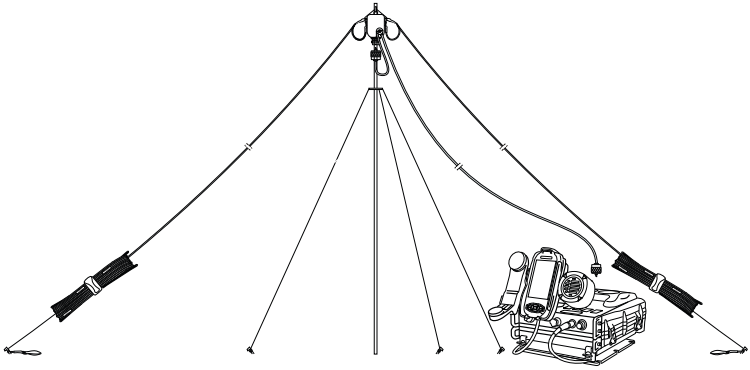

Sloping Dipole

Radiation with the Sloping Dipole becomes somewhat asymmetrical, with increased gain in the direction of the lower end of the antenna, and reduced gain towards the higher end.

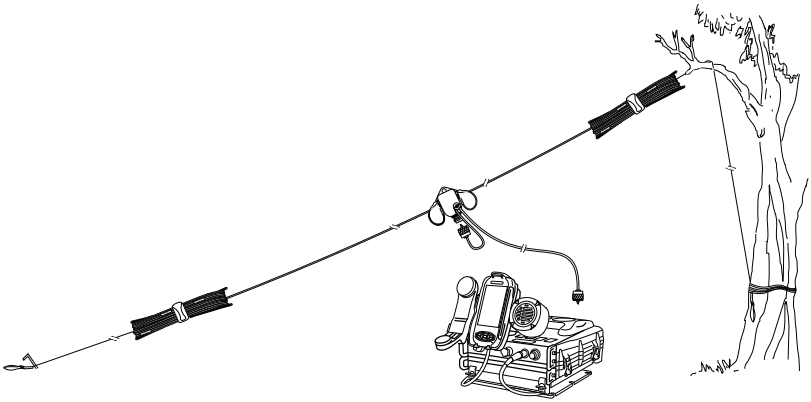

Single Ended

For rapid deployment, with reduced but still acceptable efficiency, the antenna can be operated single ended. In this configuration, one side of the antenna (labelled “antenna”) is unwound to the desired frequency and tied to an elevated structure. The central balun should be located close to the ground, and the remaining side of the antenna (“earth”) partly unwound (5 to 10m) and stretched out on the ground below the radiating element.

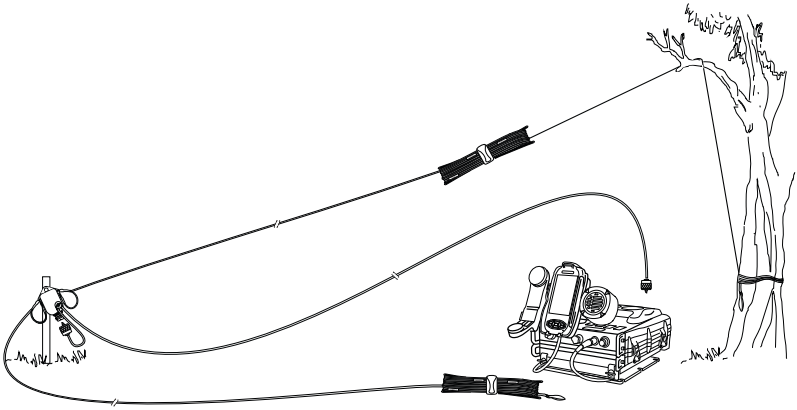

Marine Installations

The Barrett 911 automatic antenna tuner is designed for use in land base station and maritime HF services. Primarily designed for operation with end-fed unbalanced antennas such as whips and long wires, the tuner is built in a waterproof impact resistant, moulded ABS plastic enclosure.

Antenna Selection

The 911 automatic antenna tuner will operate into almost any end-fed antenna with a length exceeding 2.5 metres, providing an effective ground (earth) is used. The antenna efficiency will be proportional to the length of the antenna and will be maximum when the length of the antenna approaches ¼ wavelength. It is advisable to limit the wire antenna to ¼ or ¾ wavelength at the highest frequency to be used.

Antenna

On sailing vessels the antenna can either be an insulated backstay or a whip antenna mounted vertically, usually on the stern. Best performance will be achieved by using an insulated backstay as the radiating length will be longer than that available when using a whip. The top insulator on the backstay should be approximately 300 mm from the mast and the bottom insulator should be at eye level above the deck. The distance between insulators should be greater than 10 metres and less than 35 metres. A whip antenna is generally used on small to medium sized power vessels. There are different length whips to suit the vessel length.

Transceiver and Tuner Mounting

Select a suitable position in the vessel to mount the transceiver. It should be a position that is out of the weather and easily accessible to the operator, whilst as close as practical to the 13.8 V DC power source. Mount the transceiver to a solid fixing point using the mounting cradle. Make sure there is sufficient space at the rear of the transceiver to connect the power and antenna cables.

The antenna tuner should be mounted as close to the antenna feed point as possible. In metal vessels the length of the feeder from the antenna tuner to the feed-through insulator, inside the vessel, should be kept less than 1 metre.

The antenna feed cable should be a suitable high voltage cable. Care should be taken to avoid sharp points when terminating the cable to prevent corona discharges.

The interconnect cable supplied with the antenna tuner should be routed away from other cables back to the transceiver and connected as indicated in the diagram on page 182.

Ground (Earth) System

The ground (earth) system is a key part of the overall antenna system and consequently the system operation. An inadequate ground (earth) system is the primary cause of poor performance and tuning problems. There is little point in installing the antenna unless a good ground (earth) system or counterpoise can be provided.

Metal hulled vessels provide an almost perfect ground (earth). The tuner ground (earth) terminal should be connected directly to the hull using the shortest possible ground (earth) strap. The point of connection to the hull should be prepared so that it is free of paint and rust to ensure a good contact area with minimum electrical resistance.

Wooden or fibreglass vessels present more of a problem to ground (counterpoise). Ideally the vessel should be fitted with an external copper ground (earth) sheet, connected to the interior of the vessel by suitable stud or an ground (earth) plate (“E” plate Barrett P/N BCA91700)

Should neither of these methods be available it will be necessary to bond as many large metallic objects, such as the engine and propeller shaft, together to form a ground (earth).

Whichever method is used the ground (earth) run from the ground (earth) plate to the antenna tuner should be as short as possible and use copper strap at least 50 mm wide (wider if available). Consideration must always be given to the problem of electrolysis. Severe structural damage may occur if electrolysis is present. Consult your maritime experts for more information concerning electrolysis.

Corrosion

All connections in marine situations are subject to corrosion and oxidation. To minimise this all joints should be cleaned and have silicon grease applied before assembly. Under severe conditions joints should be protected with self vulcanising rubber tape.

Electrical Checkout

After mechanical installation is complete, select the highest frequency to be used on the transceiver. A directional watt-meter may be inserted in the coaxial transmission line between the transceiver and the tuner, if desired, although the internal tuner of the PRC-4090 transceiver is accurate. The tune mode on the transceiver is then activated (see page 107). Upon application of RF energy, the tuner should start to tune, indicated by the ‘clattering’ of the tuner relays. After a few seconds the relay noise will cease. The transceiver should indicate “Tune OK” and the watt-meter reflected power should indicate a low value consistent with a VSWR of better than 2:1. Select the lowest desired frequency on

the transceiver and repeat the above procedure. The result should be the same, except that the tune cycle may take longer. If the above procedure does not give the results as indicated, check that the antenna length and connections are correct and re-check all ground (earth) connections.

Note: When received, the Barrett 911 automatic antenna tuner memory system will usually not have any pre-stored tuning information appropriate to your installation. To allow the 911 to 'learn' its tuning information simply proceed from one channel to the next allowing the normal tune cycle to take place. Each successful tune is 'memorised' so that when that channel is re-selected, the tuner will almost instantaneously retune to that frequency.

Connection Details For a PRC-4090 Transceiver and 4015 Automatic Antenna Tuner in a Marine Installation

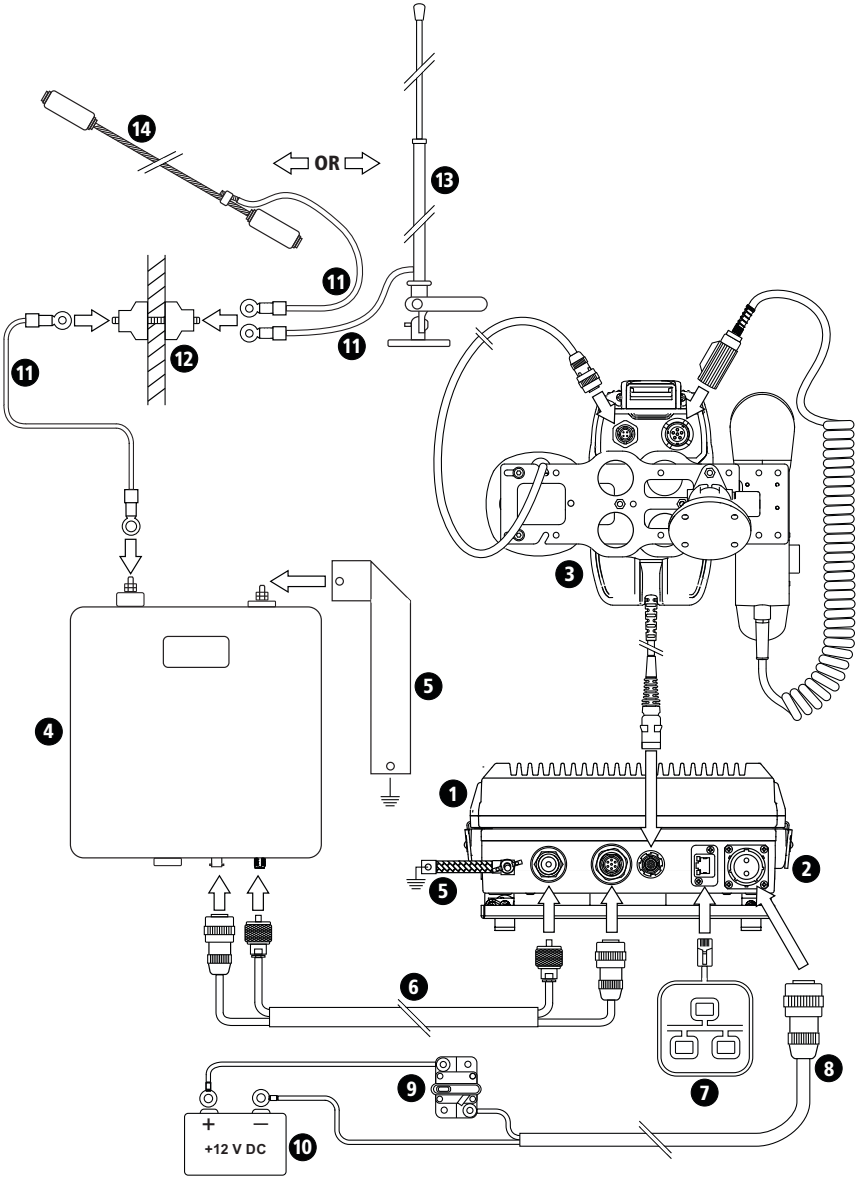

1. Barrett PRC-4090 HF SDR Transceiver (P/N 4090-00-01)
2. Barrett PRC-4090 System Docking Station (P/N 4090-05-00)
3. Barrett PRC-4090 Control handset (P/N 4090-01-09)
4. Barrett 4015 Automatic Marine Antenna Tuner (P/N BC401500)
5. Ground (earth)
6. Coaxial / Control Cable Extension (P/N 2019-00-06)
7. Network
8. 6 metre power cable supplied with transceiver (P/N 4019-00-02)
9. Fuse in-line with spare
10. 12 V (or 24 V) DC Battery
11. Antenna Feeder Cable
12. Feed-through Insulator (P/N BCA91701)
13. Marine Whip Antenna
14. Sailing vessel back stay antenna or longwire antenna

APPENDICES 8

This chapter contains the following sections:

- Appendix 1- Specifications
- Appendix 2 - Connectors
- Appendix 3 - Overview of HF Operation
- Appendix 4 - BITE Test

Appendix 1 - Specifications

General

Standards	Designed to meet or exceed: FCC - Part 87 and Part 90 Industry Canada (IC) RSS-125 Issue 2 CE Australian/ New Zealand standard - AS/NZS 4770:2000 - AS/NZS 4582:1999 EMC and standard IEC 945 Mil-STD 810G for temperature, humidity, altitude, shock, vibration and IP54 NTIA JITC EN63211:2008
Transmit frequency range	1.5 MHz to 30 MHz (reduced performance below 1.6MHz)
Receive frequency range	250 kHz to 30 MHz
Frequency stability	±10Hz ±0.1PPM over temperature range of -30°C to +70°C (±0.5PPM if ESU not ready)
Frequency resolution	10Hz: Program Mode 1Hz: Tunable Receiver
Operating modes	J3E (USB, LSB) - H3E (AM) - J2A (CW) - CF (Custom Filter) - ISB (data option)
Filter bandwidth	Fully software defined standard and custom filter range from 300Hz to 3000Hz (6kHz ISB option)
Operating temperature	-30°C to +70°C relative humidity 95% , non-condensing

Frequency hopping	Barrett HF Frequency Hopping algorithms - 25 or 5 hops per second with External Synchronisation Unit (ESU) supplied when the option is fitted. Improved internal clock to maintain clock synch without GPS signal for extended periods in the field (Minimum 48 hrs w/o GPS Signal)
Selcall system	Based on CCIR 493-4, four and six digit systems. Simple mode for a single radio ID. Expanded mode to allow for multiple Selcall IDs. Option: ICAO Annex 10 Selcall Encode (ARINC).
ALE Standards (options)	MIL-STD-188-141B (2G) JITC Certified, FED STD 1045 MIL-STD-188-141B Appendix C (3G), STANAG 4538
Digital Voice Encryption	Enhanced Digital Voice and Secure Digital Voice options with choice of autobauding “Low Rate” vocoder option (TWELP/MELP Non-proprietary - customisation available) providing superior voice recovery on poor channels down to -3dB. - AES 256 Digital Encryption with 600/1200/2400bps Vocoder - DES 56 Digital Encryption with 700/1200/2400bps Vocoder
Security	Zeroise, Over Air Transceiver Lock, Transceiver Kill
User Interface	Ruggedised touch screen and keypad (VFO control in RX/TX Scroll).
LCD Display	4.3 inch 800 x 480 pixel display with capacitive touch-screen
Current consumption	350 mA standby (muted)
Channel capacity	1000 programmable channels
Contact Capacity	500 contacts
Scan Tables	10 scan tables
Noise Reduction (DSP)	3 level settings
Nominal Voltage	+13.8VDC, Negative Ground

Operating Voltage Range	+11 V to +28 V DC operation
Over Voltage Protection	Up to 35V
Reverse Voltage Protection	Built in
Weight	3.10 kg (transceiver only)
Width	241 mm (transceiver only)
Depth	331 mm (transceiver only)
Height	53 mm (transceiver only)

Receiver

Sensitivity (250kHz - 30MHz)	-126dBm (0.112μV) for 10dB SINAD – J3E Mode (Specification typical across frequency band, reduced sensitivity between 250kHz and 500kHz)
Selectivity J3E	-1kHz and +4kHz: Better than 70dB -2kHz and +5kHz: Better than 70dB -5kHz and +8kHz: Better than 75dB
Selectivity J2B (option)	-500Hz and +500Hz: Better than 60dB
Blocking	Max usable sensitivity -20kHz and +20kHz: better than 95dB
Intermodulation Distortion	Better than 110 dBμV
Spurious response ratio	Better than 95 dB
Reciprocal mixing	Better than 110 dBμV (As defined in ITU-R F.612)
In-band IMD	Better than 40 dB
Audio output	4 W into 4 ohm at less than 2% distortion
Audio response	-6dB for 300Hz to 2700 Hz (adjustable bandwidth)
Handset Audio - Output Max	6.5 mW into a 1 k ohm load ±1.5 dB, with a 1 kHz tone.

Transmitter

Power Output	SDS configuration: 150W, 125W, 30W, 10W PEP ± 1.5dB (2 tone or voice) Manpack configuration: 30W, 10W PEP ± 1.5dB (2 tone or voice)
Duty cycle	100% 2 tone input with fan option (-30°C to +50°C relative humidity 95%, non-condensing)
Protection	Safe under all load conditions, thermal protection against excessive power transistor temperatures
Intermodulation Products	Better than 32dB below PEP (26dB below two-tone peak)
Current Draw Transmit 13.8VDC	10W: 4.5A (1 tone), 3.5A (2 tone) 30W: 8.5A (1 tone), 6A (2 tone) 125W: 23.5 (1 tone), 20.5A (2 tone) 150W: 24.5 (1 tone), 20.5A (2 tone)
Current Draw Transmit 15VDC	10W: 4.0A (1 tone), 3.5A (2 tone) 30W: 7.5A (1 tone), 5.5A (2 tone) 125W: 23.5A (1 tone), 18.5A (2 tone) 150W: 23.5A (1 tone), 17.5A (2 tone)
Current Draw Transmit 24VDC	10W: 3.5A (1 tone), 3.0A (2 tone) 30W: 5.5A (1 tone), 3.5A (2 tone) 125W: 15.5A (1 tone), 11.5A (2 tone) 150W: 15.5A (1 tone), 11.5A (2 tone)

Specifications are typical. Equipment descriptions and specifications are subject to change without notice or obligation.

Appendix 2 - Connectors

Transceiver

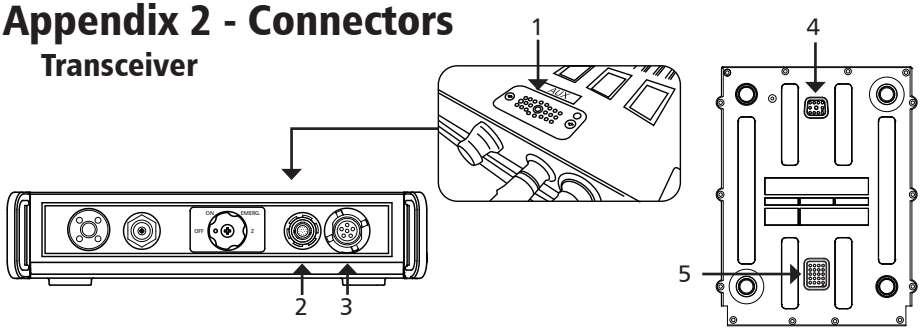

1. Auxilliary Connector

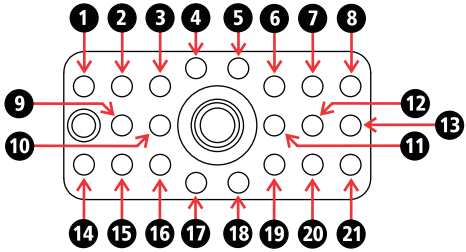

PIN	Signal
1	CW Key
2	1 Pulse per Second
3	GPS data NMEA format
4	+5V Out
5	13V8 Out
6	Scan Stop
7	Balanced Audio Out Positive
8	Balanced Audio Out Negative
9	PTT Out
10	Ground
11	Auxilliary Power Enable
12	Auxilliary Line In Positive
13	Auxilliary Line In Negative
14	Auxilliary Digital Out 1
15	Auxilliary Digital Out 2

PIN	Signal
16	Mute State
17	USB Data Positive
18	USB Data Negative
19	+5 USB
20	Auxilliary PTT
21	Auxilliary Digital In

2. Control Handset Connector

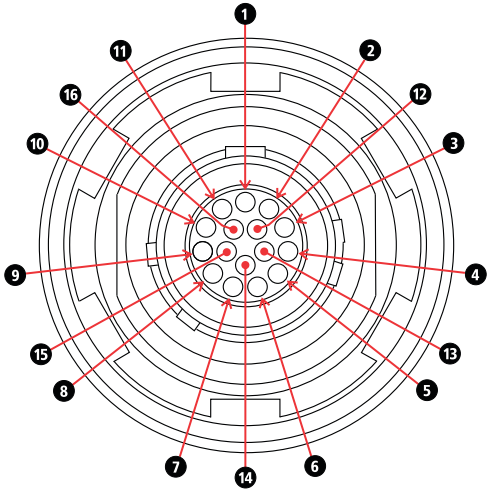

PIN	Signal
1	Ground
2	Handset Voltage
3	CAN Bus positive
4	CAN Bus Negative
5	Handset Audio Positive
6	Handset Audio Negative
7	Ethernet TX Data positive
8	Ethernet TX Data negative
9	Ethernet RX Data positive

PIN	Signal
10	Ethernet RX Data negative
11	Handset GPS 1 Pulse per Second
12	Reserved
13	Reserved
14	Reserved
15	Reserved
16	Reserved

3. H-250 Handset Connector

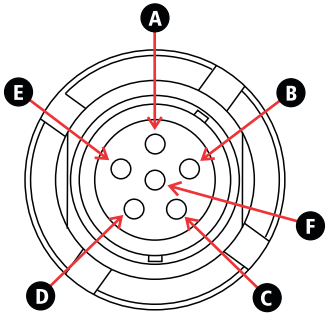

PIN	Signal
A	H250 Handset Ground
B	H250 Speaker output
C	H250 PTT
D	H250 Microphone
E	Reserved
F	Reserved

4. Power Connector

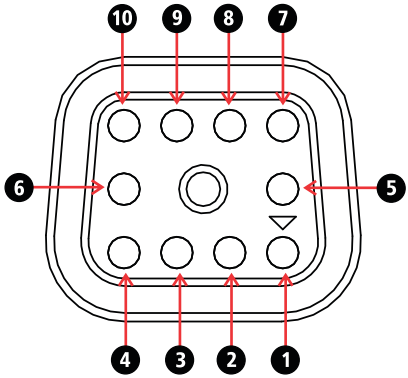

PIN	Signal
1	Input Voltage
2	Input Voltage
3	Input Voltage
4	RS232 Transmit
5	Input Voltage
6	RS232 Receive
7	Ground
8	Ground
9	Ground
10	Ground

5. SDS Connector

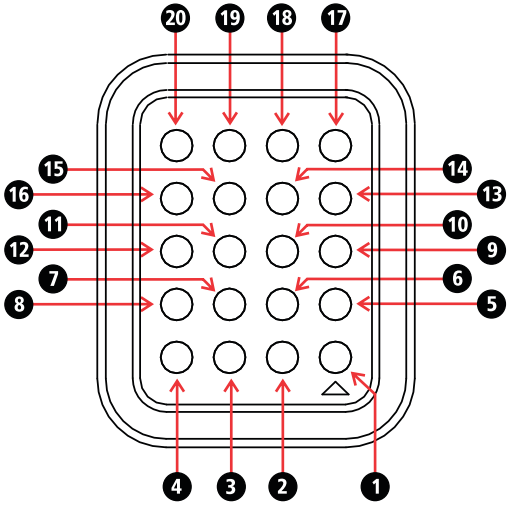

PIN	Signal
1	Handset Voltage
2	Handset GPS 1 Pulse per Second
3	CAN Bus positive
4	CAN Bus Negative
5	External GPS 1 Pulse per Second
6	Reserved
7	Handset Audio Negative
8	Handset Audio Positive
9	Ground
10	Ground
11	SDS Voltage Enable
12	SDS Voltage Enable
13	External ATU Voltage
14	External ATU Scan signal
15	External ATU Tuned signal
16	SDS Detect

PIN	Signal
17	Ethernet TX Data positive
18	Ethernet TX Data negative
19	Ethernet RX Data positive
20	Ethernet RX Data negative

Battery Pack

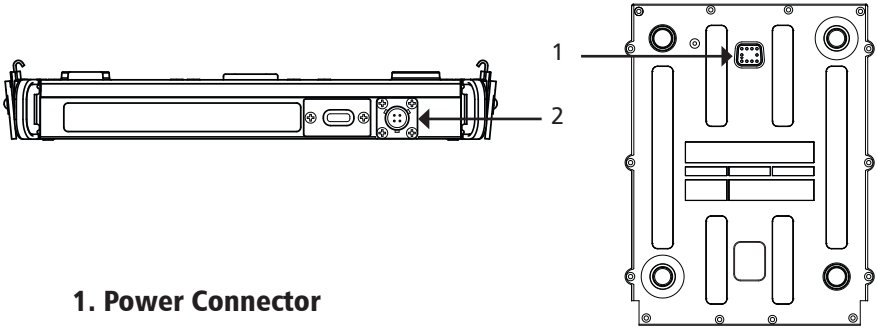

1. Power Connector

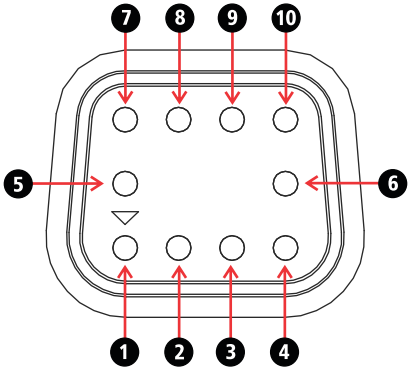

PIN	Signal
1	Input Voltage
2	Input Voltage
3	Input Voltage
4	Battery communication Transmit
5	Input Voltage
6	Battery communication Clock
7	Ground
8	Ground
9	Ground
10	Ground

2. DC In

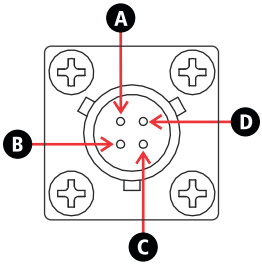

PIN	Description
A	DC Positive
B	DC Positive
C	DC Negative
D	DC Negative

System Docking Station (SDS)

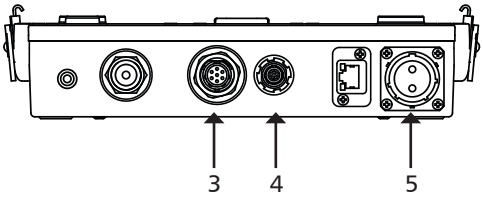

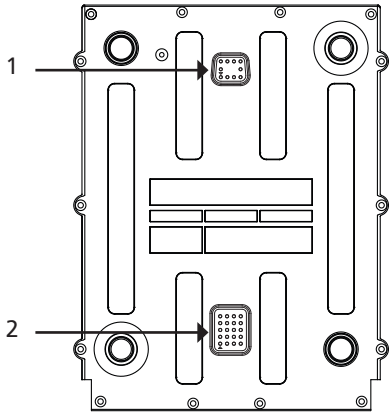

1. Power Connector

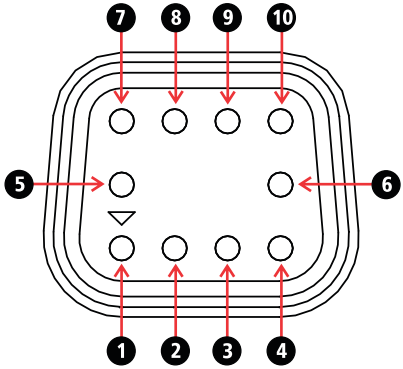

PIN	Signal
1	Input Voltage
2	Input Voltage
3	Input Voltage
4	RS232 Transmit
5	Input Voltage
6	RS232 Receive
7	Ground
8	Ground
9	Ground
10	Ground

2. SDS Connector

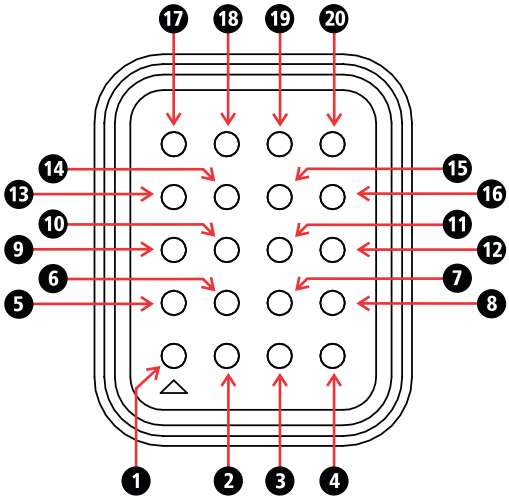

PIN	Signal
1	Handset Voltage
2	Handset GPS 1 Pulse per Second
3	CAN Bus positive
4	CAN Bus Negative
5	External GPS 1 Pulse per Second
6	Reserved
7	Handset Audio Negative
8	Handset Audio Positive
9	Ground
10	Ground
11	SDS Voltage Enable
12	SDS Voltage Enable
13	External ATU Voltage
14	External ATU Scan signal
15	External ATU Tuned signal
16	SDS Detect

PIN	Signal
17	Ethernet TX Data positive
18	Ethernet TX Data negative
19	Ethernet RX Data positive
20	Ethernet RX Data negative

3. ATU Connector

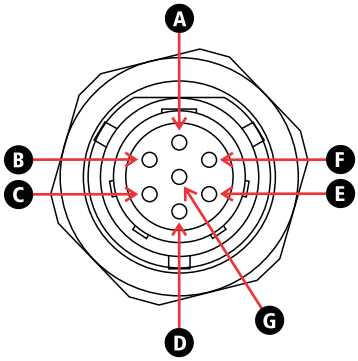

PIN	Signal
A	Ground
B	Recieve Data line
C	1 pulse per second
D	ATU Scan Line
E	ATU Tuned signal
F	ATU Voltage 13V8
G	Transmit data line

4. Control Handset Connector

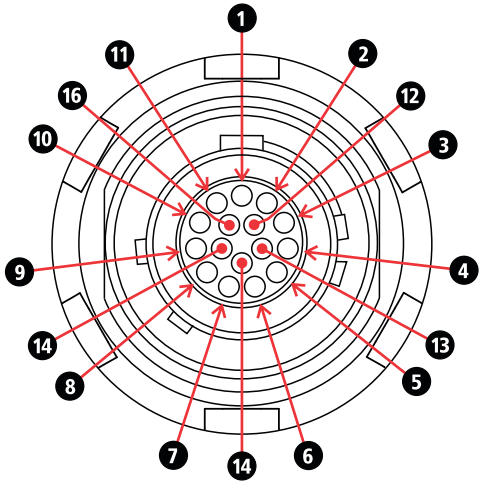

PIN	Signal
1	Ground
2	Handset Voltage
3	CAN Bus positive
4	CAN Bus Negative
5	Handset Audio Positive
6	Handset Audio Negative
7	Ethernet TX Data positive
8	Ethernet TX Data negative
9	Ethernet RX Data positive
10	Ethernet RX Data negative
11	Handset GPS 1 Pulse per Second
12	Reserved
13	Reserved
14	Reserved
15	Reserved
16	Reserved

5. DC Input Connector

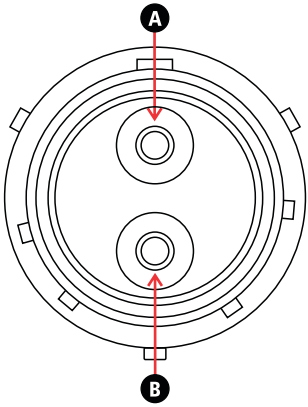

PIN	Signal
A	Input Voltage (+11 V to +28 V DC)
B	Ground

Control Handset

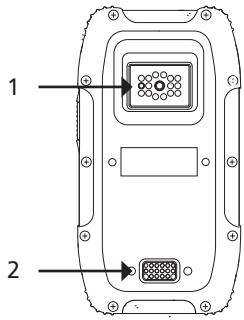

1. Handset Auxilliary Connector

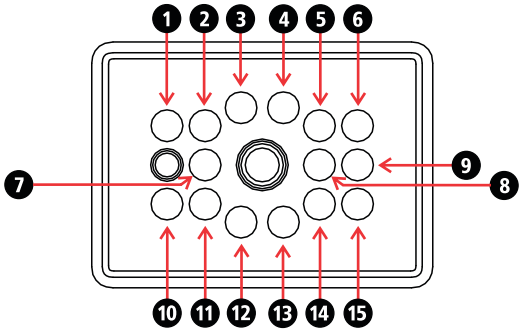

PIN	Signal
1	Reserved
2	Reserved
3	USB Data Positive
4	USB Data Negative
5	+5 USB
6	Reserved
7	Ground
8	Ground
9	Handset Dock detection
10	Speaker Out Negative

PIN	Signal
11	Speaker Out Positive
12	Dock Speaker Detection
13	H250 Microphone Input
14	H250 PTT
15	H250 Speaker output

2. Control Handset Cable Connector

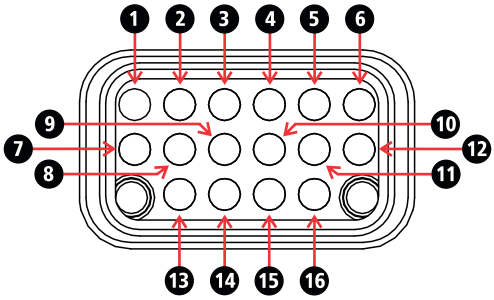

PIN	Signal
1	Handset Voltage
2	CAN Bus positive
3	4050 Detect voltage
4	Handset GPS 1 Pulse per Second
5	Handset Audio Positive
6	Ground
7	CAN Bus Negative
8	Speaker Out Negative
9	Reserved
10	Reserved
11	Speaker Out Negative
12	Handset Audio Negative
13	Ethernet TX Data positive

PIN	Signal
14	Ethernet TX Data negative
15	Ethernet RX Data positive
16	Ethernet RX Data negative

Handset Docking Station

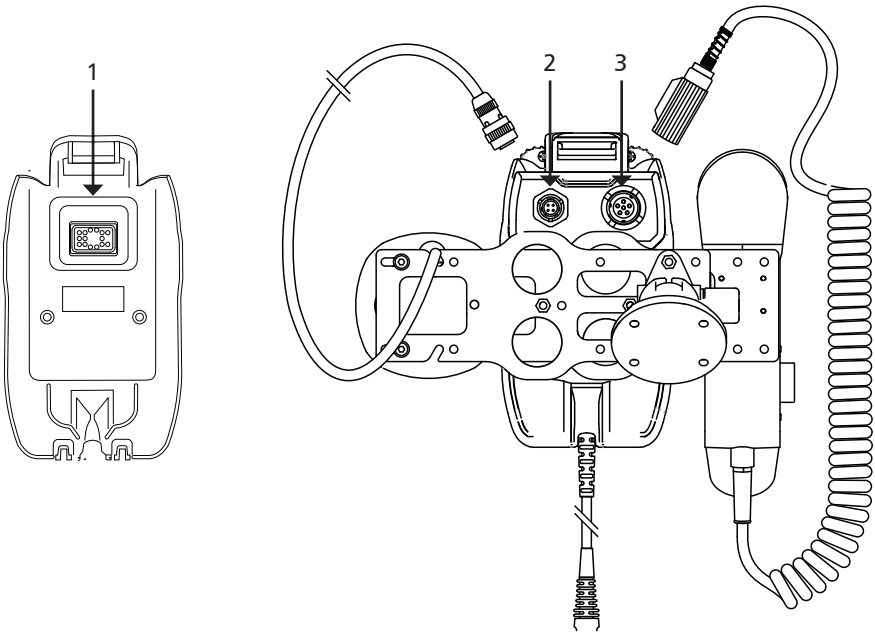

1. Cradle Auxilliary Connector

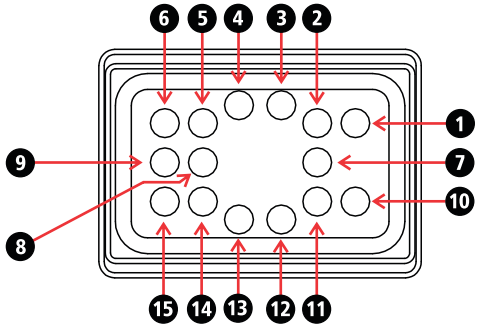

PIN	Signal
1	Reserved
2	Reserved
3	USB Data Positive
4	USB Data Negative
5	+5 USB
6	Reserved
7	Ground
8	Ground
9	Handset Dock detection
10	Speaker Out Negative
11	Speaker Out Positive
12	Dock Speaker Detection
13	H250 Microphone Input
14	H250 PTT
15	H250 Speaker output

2. External Speaker Connector

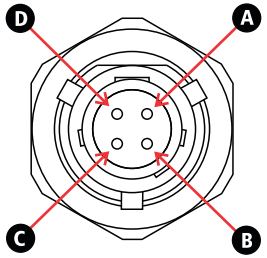

PIN	Signal
A	Dock Speaker Detection
B	Speaker Out Positive
C	Speaker Out Negative
D	Ground

3. H-250 Handset Connector

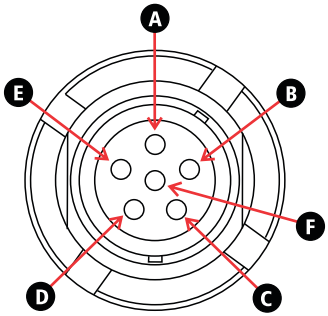

PIN	Signal
A	H250 Handset Ground
B	H250 Speaker output
C	H250 PTT
D	H250 Microphone
E	Reserved
F	Reserved

Appendix 3 - Overview of HF Operation

HF (High Frequency) is the radio spectrum with frequencies between 1.5 and 30 MHz. Within this radio spectrum an efficient form of transmitter modulation, SSB (Single Side Band), is used. This, combined with the use of the ionosphere - a layer of ionisation gases that resides between 100 and 700 km above the Earth's surface, provides efficient, cost effective communications over short, medium and long distances - without the need for expensive re-transmission devices, such as the VHF or UHF repeaters or satellites, all of which have ongoing operational costs and a reliance on a physical infrastructure.

In many remote areas, HF / SSB is the only form of communication possible.

HF Propagation

When HF / SSB radio waves are generated by the transceiver there are usually two components:

- The ground-wave, which travels directly from the transmitting antenna to the receiving antenna following the contours of the Earth.
- The sky-wave, which travels upward and at an angle from the antenna, until it reaches the ionosphere (an ionised layer high above the Earth's surface), and is then refracted back down to Earth, to the receiving antenna.

Generally speaking, ground-wave is used to communicate over shorter distances usually less than 50 km. Because ground-wave follows the contours of the earth, it is affected by the type of terrain it passes over. Ground wave is rapidly reduced in level when it passes over heavily forested areas or mountainous terrain.

Sky-wave is used to communicate reliably over medium to long distances up to 3,000 km. Whilst the nature of sky-wave propagation means it is not affected by the type of terrain as in ground-waves, it is affected by factors involving the ionosphere as described below.

Radio Wave Propagation

The following illustrations show the characteristics of ground-wave and sky-wave propagation during day and night time. In each illustration the height of the ionosphere above the ground is shown.

In both illustrations Station A communicates with Stations B, C and D. Propagation from Station A to B is by ground-wave. The diagrams illustrate that the ground-wave is not affected by the time of day and the height of the ionosphere above the ground.

Propagation from Station A to C and D, is by sky-wave and as the diagrams illustrate, the sky-wave is significantly affected by the time of day and the height of the ionosphere above the ground.

Under each diagram there are recommended working frequencies listed. Please note that these will vary according to time of year and other factors. They are intended only as a guide and are subject to change.

Day

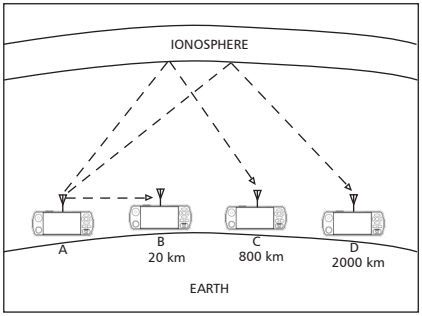

The sun is higher
The ionosphere is higher
The best frequency to use is higher.

A to B - Possible optimum working frequency is 3 MHz

A to C - Possible optimum working frequency is between 7 - 9 MHz

A to D - Possible optimum working frequency is between 13 - 16 MHz

Night

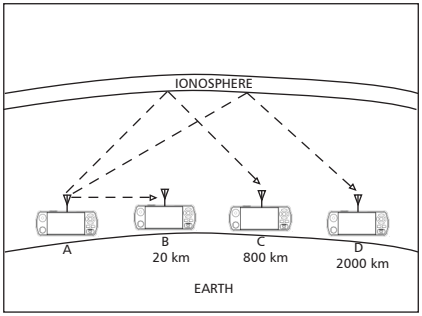

The sun is lower
The ionosphere is lower
The best frequency to use is lower.

A to B - Possible optimum working frequency is 3 MHz

A to C - Possible optimum working frequency is between 5 - 7 MHz

A to D - Possible optimum working frequency is between 9 - 12 MHz

Factors Which Affect HF/SSB Communications

There are a number of different factors which will affect the success of communications via HF/SSB radio. These are outlined below:

Frequency Selection

Frequency selection is perhaps the most important factor that will determine the success of your HF/SSB communications.

Generally speaking the greater the distance over which you want to communicate, the higher the frequency you should use.

Beacon Call, a Selcall (Selective Call) function built into the Barrett PRC-4090 Transceiver, makes finding the correct frequency to use easy. A Beacon Call is based on the network of transceivers all having a selection of frequencies that will accommodate most ionospheric conditions. When in standby, the network transceivers scan these frequencies waiting for a call (Selcall or Beacon Call) from another transceiver. The transceiver wishing to check for the best frequency to operate on sends a Beacon Call to the station to be contacted. If the call to the other station is successful, a revertive tone from the station being called will be heard, indicating the channel selected was suitable for the ionospheric conditions prevailing. If the revertive tone is not heard or is very weak, another channel may be tried until a revertive tone of satisfactory signal strength is heard.

(Refer to Beacon Calls on page 38 for more details.)

Time of Day

As a rule, the higher the sun, the higher the frequency that should be used. This means that you will generally use a low frequency to communicate early morning, late afternoon and evening, but you will use a higher frequency to cover the same distance during times when the sun is high in the sky (for example, midday). You will need to observe the above rule carefully if your transceiver has a limited number of frequencies programmed into it, as you may only be able to communicate effectively at certain times of the day.

Weather Conditions

Certain weather conditions will also affect HF/SSB communications. Stormy conditions will increase the background noise as a result of static caused by lightning. This background noise could rise to a level that will blank out the signals you are trying to receive.

Man-made Electrical Interference

Interference of an electrical nature can be caused by overhanging power lines, high power generators, air-conditioners, thermostats, refrigerators and vehicle engines, when in close proximity to your antenna. The result of such interference may cause a continuous or intermittent increase in the level of background noise.

System Configuration and Installation

The method in which your system is configured and installed will also affect the success of your HF/SSB communications. Your choice of antenna system and power supply is critical. Correct installation is also extremely important. An HF/SSB transceiver is generally installed using different rules to those used to install VHF or UHF transceivers. Failure to correctly install an HF/SSB system will greatly affect the communications quality you will obtain.

Your local Barrett representative will be able to assist with your system configuration and/or installation.

HF Communications Compared with VHF or UHF Short Distance Communications

Communications on any HF/SSB transceiver will sound different to that on a VHF (Very High Frequency) radio or UHF (Ultra High Frequency) radio or telephone. This is because of the nature of HF propagation and the modulation methods used. On HF/SSB transceivers there will always be background noise evident behind the signal you are receiving and this will increase when there is electrical interference or thunderstorm activity in the area.

Appendix 4 - BITE Test

It is recommended that any accessories (ATU, linear amplifier, Dual Antenna Switch Unit, secondary control head, GPS etc.), auxiliary port connections and the antenna be disconnected from the SDS or manpack to get consistent BITE test results. Additionally do not touch the control head and the microphone buttons while the tests are running.

Each test is outlined below as are possible causes for a failed result. If the fault is interfering with the everyday operation of the system, please contact your local Barrett dealer or Support at www.barrettcommunications.com.au.

Tests

Real Time Clock

This test checks if the real time clock on the microboard responds to commands. A failed test indicates an issue with the I2C bus on the **microboard** or a defective real time clock.

Pre Amplifier I/O

This test checks if the pre amplifier board is accessible by checking if the port expander responds to commands. A failed test indicates an issue with the I2C bus on the **microboard**, the **pre amplifier board** or a **loose connector** between the two transceiver halves.

Interface I/O

This test checks if the internal interface boards are accessible. A failed test indicates an issue with the I2C bus on the **microboard**, one of the **interface boards** or a **loose connector** between the two boards.

Local Oscillator

This test checks if the oscillator on the microboard is accessible. A failed test indicates an issue with the SPI bus on the **microboard** or a defective oscillator.

Audio Codec

This test checks if the audio codec on the microboard is accessible. A failed test indicates an issue with the I2C bus on the **microboard**, a failed DSB bootup, an ISP bus issue to the DSP or a defective audio codec.

Analog to Digital Converter

This test checks if the A/D converter for measuring the final stage voltage is accessible. A failed test indicates an issue with the I2C bus on the **microboard**, the **pre amplifier board**, a **loose connector** between the two transceiver halves or a defective A/D converter.

Temperature Sensor

This test checks if the temperature sensor for measuring the final stage temperature is accessible. A failed test indicates an issue with the I2C bus on the **microboard**, the **pre amplifier board**, a **loose connector** between the two transceiver halves or a defective temperature sensor.

Digital to Analog Converter

This test checks if the D/A converter for controlling the boost converter is accessible. A failed test indicates an issue with the I2C bus on the **microboard**, the **pre amplifier board**, a **loose connector** between the two transceiver halves or a defective D/A converter.

Rx Current

This test checks if the overall current draw while in receive mode (idle) is below 1A. This test can fail if too many accessories (Dual Antenna Switch Unit, ATU, linear amplifier etc) are connected to the SDR or if the accessories are faulty. Disconnect all accessories and rerun the tests. If the test is failed again, there is an issue with the **pre amplifier board**.

Tx Current

This test checks if the overall current draw while in transmit mode (BIAS current added) is between 1A and 4A. A failed test indicates the same issues as with the “Rx Current” test. Additionally, there may be an issue with the final stage on the **pre amplifier board**.

Final Voltage

This test checks if the voltage of the final stage is between 28V and 32V. A failed test indicates a defective **pre amplifier board** (port expander fails to configure the pre amplifier board, the D/A converter fails to set voltage, the boost converter fails or the A/D converter fails to read the voltage).

EEPROM

This test checks if the EEPROM allows read/write access. A failed test indicates a faulty EEPROM on the **microboard**.

Rx Test

This test checks the receiver chain with a synthetic signal. A failed test indicates a defect on the **microboard** (e.g. synthesizer, digital IF, etc).

Automatic Gain Controller

This test cycles through the attenuators and checks if the AGC adjusts itself accordingly. A failed test indicates a defect on the **microboard** (e.g. attenuators).

Warranty Statement

Barrett Communications (hereafter referred to as 'Seller') provides a three (3) year warranty on all Barrett products from the date of shipment from the Seller. A one (1) year warranty from the date of shipment from the Seller is provided for all batteries.

Each warranty guarantees acceptable performance of the product under normal recommended conditions for the duration of the warranty period. In cases of accident, abuse, incorrect installation or maintenance by a non-Seller representative, subjection to abnormal environmental conditions, negligence or use other than those in accordance with instructions issued by the Seller, the warranty shall be voided. In addition, this warranty shall not cover low performance – specifically the distance or quality of transmission and reception - due to unfavourable environmental or locational conditions. Nor shall this warranty cover the quality of transmission and reception of transceivers mounted in vehicles or vessels that have not been sufficiently electrically suppressed.

Should any fault due to bad design, workmanship or materials be proven at any time within the warranty period, the Seller will rectify such fault free of charge provided that the equipment is returned, freight paid, to Barrett Communications Pty Ltd head office or to an authorised service centre. The repaired or replaced product will remain covered under and throughout the term of the original warranty period up to its expiration. No repair or replacement will extend the warranty term past the original thirty-six (36) month anniversary of the original date of shipment from the Seller.

Firmware and software (pre-installed, stand-alone or provided as an update), hereafter referred to as 'Software', is guaranteed to perform acceptably within the specifications provided by the Seller, provided that the Software is within the warranty period.

Should Software not perform acceptably, the Seller will use all commercially reasonable efforts to correct such nonconformity as reported to the Seller directly or via a support representative. The Seller is not obliged to update Software under warranty if the nonconformity is caused by a) the use or operation of the Software in an environment other than intended or recommended by the Seller in relevant documentation, or b) modifications made to the Software not authorised or undertaken by the Seller or a representative of said Seller.

Subject to the matters set out in this warranty, no liability, expressed or implied is accepted for any consequential loss, damage or injury arising as a result of a fault in the equipment and, all expressed or implied warranties as to quality or fitness for any purpose are hereby excluded.

This warranty does not extend to products supplied by the Seller which are not designed or manufactured by it. The Seller will however make every endeavour to ensure that the purchaser receives full benefit on any warranty given by the original equipment manufacturer.

This warranty is restricted to the original purchaser except where the original purchaser is a reseller authorised by the Seller who has purchased for the purpose of resale, warranty shall be extended to the reseller's customer.

Contact Details

Our customer / dealer technical support department can be contacted via land mail, email, telephone or via support ticket on the technical support web page.

https://www.barrettcommunications.com.au/support/

Barrett Communications Pty Ltd Head Office:

PO Box 1214, Bibra Lake WA 6965 AUSTRALIA

Toll Free Tel: 1800 999 580 (Within Australia)
Tel: +618 9434 1700
Fax: +618 9418 6757
email: support@barrettcommunications.com.au

Telephone support from the Australian office is available from 7:30 am to 4:00 pm local time Monday to Friday.

Barrett Communications – Europe:

Unit 9, Fulcrum 2 Victory Park, Solent Way,
Whiteley Hampshire PO15 7FN United Kingdom

Tel: +44 (0) 1489 880 332
Fax: +44 (0) 1489 565 422
email: support@barrettcommunications.co.uk

Telephone support from the UK office is available from 8:30 am to 5:00 pm local time Monday to Friday.

Barrett Communications Corporation USA:

90 Office Parkway
Pittsford, N.Y. 14534

Tel: +1 585 582 6134
email: support@barrettusa.com

Telephone support from the USA support office is available from 8:30 am to 5:00 pm local time Monday to Friday.

Index

A

B

C

D

E

F

G

H

I

L

M

N

O

P

R

S

T

V

Head Office

Barrett Communications Pty Ltd
47 Discovery Drive, Bibra Lake, WA 6163 Australia
Tel: +61 8 9434 1700 Fax: +61 8 9418 6757
Email: info@barrettcommunications.com.au
www.barrettcommunications.com.au

Europe

Barrett Communications - Europe
Unit 9, Fulcrum 2, Solent Way, Whiteley, Hampshire, PO15 7FN United Kingdom
Tel: +44 (0) 1489 880 332 Fax: +44 (0) 1489 565 422
Email: uksales@barrettcommunications.co.uk

USA

Barrett Communications USA LLC
90 Office Parkway, Pittsford, NY 14534 United States of America
Tel: +1 585 582 6134
Email: sales@barrettusa.com